DIVISION 10
MATERIALS

SECTION 1000
PORTLAND CEMENT CONCRETE
PRODUCTION AND DELIVERY

1000-1 DESCRIPTION

This section addresses portland cement concrete to be used for pavement, precast construction, incidental construction, and structures. Produce and deliver portland cement concrete to where it is incorporated into the work.

Produce portland cement concrete composed of portland cement, fine and coarse aggregates, water, and, optionally, a pozzolan. Type IP blended cement or Type IS blended cement may be used in lieu of portland cement, and fly ash, ground granulated blast furnace slag, or silica fume may be substituted for a portion of the portland cement. In addition, add an air entraining agent and/or other chemical admixtures if required or permitted by these Specifications. Use the class of portland cement concrete required by the contract, and proportion, mix, and deliver in accordance with the requirements contained herein.

Mixes for all portland cement concrete covered by this section shall be designed by a Certified Concrete Mix Design Technician.

When concrete being placed in any one pour is furnished by more than one concrete plant, use the same mix design for all concrete, including sources of cement, sand, stone, pozzolan, and all admixtures.

1000-2 MATERIALS

Refer to Division 10:

Item	Section
Coarse Aggregate	1014-2
Fine Aggregate	1014-1
Portland Cement	1024-1
Type IP Blended Cement	1024-1
Fly Ash	1024-5
Type IS Blended Cement	1024-1
Ground Granulated Blast Furnace Slag	1024-6
Silica Fume	1024-7
Water	1024-4
Air Entraining Agent	1024-3
Chemical Admixtures	1024-3
Calcium Nitrite Corrosion Inhibitor	1024-3

1000-3 PORTLAND CEMENT CONCRETE FOR CONCRETE PAVEMENT

(A) Composition and Design

Submit concrete paving mix design in terms of saturated surface dry weights on M&T Form 312U for approval a minimum of 30 days prior to proposed use.

Use a mix that contains a minimum of 526 pounds of cement per cubic yard, a maximum water cement ratio of 0.559, an air content in the range of 4.5 to 5.5 percent, a maximum slump of 1.5" and a minimum flexural strength of 650 psi at 28 days.

The cement content of the mix design may be reduced by a maximum of 20% and replaced with fly ash at a minimum rate of 1.2 pounds of fly ash to each pound of cement replaced. Use a maximum water-cementitious material ratio not to exceed 0.538.

The cement content of the mix design may be reduced by a maximum of 50% and replaced with blast furnace slag pound for pound.

Include in the mix design the source of aggregates, cement, fly ash, slag, and admixtures; the gradation and specific gravity of the aggregates; the fineness modulus (F.M.) of the fine aggregate; and the dry rodded unit weight and size of the coarse aggregate. Submit test results showing that the mix design conforms to the criteria, including the 28-day flexural strength of a minimum of 6 beams made and tested in accordance with AASHTO T126 and AASHTO T97. Design the mix to produce an average flexural strength sufficient to indicate that a minimum strength of 650 psi will be achieved in the field.

Where concrete with a higher slump for hand methods of placing and finishing is necessary, submit an adjusted mix to provide a maximum slump of 3" and to maintain the water-cementitious material ratio established by the original mix design.

(B) Air Entrainment

Entrain air in the concrete by the use of an approved air entraining agent dispensed with the mixing water, unless prohibited.

Provide an air content of 5.0 percent plus or minus 1.5 percent in the freshly mixed concrete. The air content will be determined in accordance with AASHTO T152, T121, or T196. At the option of the Engineer, the air content may be measured by the Chace indicator, AASHTO T199, in which case sufficient tests will be made in accordance with AASHTO T152, T121, or T196 to establish correlation with the Chace indicator. Concrete will not be rejected based on tests made in accordance with AASHTO T199.

(C) Slump

Provide concrete with a maximum slump of 1½" where placed by a fully mechanized paving train and a maximum of 3" where placed by hand methods.

The sample taken for determination of slump will be obtained immediately after the concrete has been discharged onto the road.

(D) Set Retarding Admixture

With permission, the Contractor may use an approved set retarding admixture to facilitate placing and finishing.

Use a quantity of set retarding admixture within the range shown on the current list of approved admixtures maintained by the Materials and Tests Unit.

(E) Water Reducing Admixtures

With permission, the Contractor may use an approved water reducing admixture to facilitate placing and finishing.

Use a quantity of water reducing admixture within the range shown on the current list of approved admixtures maintained by the Materials and Tests Unit.

(F) Contractor's Responsibility for Process Control

Control the materials and operations to produce uniform pavement that meets specification requirements. Submit a plan detailing the process control and the type and frequency of testing and inspection necessary to produce concrete that meets the Specifications. Submit this plan at the preconstruction conference. Perform sampling, testing, and inspection necessary to provide adequate process control. During all batching and delivery operations assign a Certified Concrete Batch Technician on site whose sole duty is to supervise the production and control of the concrete. This duty includes the following:

(1) Tests and inspections necessary to maintain the stockpiles of aggregates in an unsegregated and uncontaminated condition.

(2) Calibration of admixture dispensing systems, weighing systems, and water gages.

(3) Tests and adjustments of mix proportions for moisture content of aggregates.

(4) Mixer performance tests prior to reducing mixing time of central mix plant to less than 90 seconds and at other times when deemed necessary by the Engineer.

(5) Verifying the actual mixing time of the concrete after all materials are introduced into the mixer at the beginning of paving operations and at least once each month.

(6) Testing all vibrators.

(7) Tests necessary to document the slump and air content of the mix produced. Determine air content at least twice each day.

(8) Tests for depth of the pavement in the plastic state.

(9) Furnishing data to verify that the approved theoretical cement content has been met at intervals not to exceed 50,000 square yards of pavement.

(10) Signing all plant reports, batch tickets, and delivery tickets.

The Department certifies technicians who satisfactorily complete examinations prepared and administered by the Division of Highways.

Perform all test procedures in compliance with the appropriate articles of Section 1000.

Tests may be witnessed by the Engineer. Document the results of all tests and inspections and make a copy available to the Engineer upon request. Take prompt action to correct conditions that have resulted in or could result in the submission of materials, products, or completed construction that do not conform to the requirements of the Specifications.

(G) Contractor Not Relieved of Responsibility for End Result

The Contractor will not be relieved of his obligation to produce a uniform pavement meeting Specifications by reason of:

(1) The acceptance or approval by the Engineer of the concrete mix design or any adjustments;

(2) Compliance with the concrete mix design and compliance with the testing requirements and other process control requirements by the Contractor; or

(3) The failure of the Engineer to perform any tests in the process control, nor the performance of any tests in the process control that indicate compliance with the Specifications.

1000-4 PORTLAND CEMENT CONCRETE FOR STRUCTURES AND INCIDENTAL CONSTRUCTION

(A) Composition and Design

Provide the class of concrete required by the contract.

Submit proposed concrete mix designs for each class of concrete to be used in the work. Mix proportions shall be determined by a testing laboratory approved by the Department. Base mix designs on laboratory trial batches that meet the requirements of Table 1000-1 and other applicable sections of these Specifications. Determine quantities of fine and coarse aggregate by ACI 211, *Recommended Practice for Selecting Proportions for Normal Weight Concrete*, using the absolute volume basis.

Submit mix designs in terms of saturated surface dry weights on M&T Form 312U at least 35 days prior to proposed use. Adjust batch proportions to compensate for surface moisture contained in the aggregates at the time of batching. Changes in the saturated surface dry mix proportions will not be permitted unless revised mix designs have been submitted to the Engineer and approved.

Accompany M&T Form 312U with a listing of laboratory test results of aggregate gradation, air content, slump, and compressive strength. List the compressive strength of at least three 6" x 12" or 4" x 8" cylinders at the age of 7 and 28 days.

Perform laboratory tests in accordance with the following test procedures:

Aggregate Gradation	AASHTO T27
Air Content	AASHTO T152
Slump	AASHTO T119
Compressive Strength	AASHTO T23 and T22

The Engineer will review the mix design for compliance with the Specifications and notify the Contractor as to its acceptability. Do not use a mix until written notice has been received. Acceptance of the mix design does not relieve the Contractor of his responsibility to furnish a product that meets Specifications. Upon written request from the Contractor, a mix design accepted and used satisfactorily on any Department project may be accepted for use on other projects.

(B) Air Entrainment

Entrain air in the concrete unless otherwise indicated on the plans or in the Specifications. Add an air entraining agent at the time of mixing to produce an air content in the freshly mixed concrete of 6.0 percent plus or minus 1.5 percent when tested at the job site. Determine the air content in accordance with AASHTO T152, T196, or T121. Measurement of air content may also be performed by the Chace indicator in accordance with AASHTO T199, in which case sufficient tests will be made in accordance with AASHTO T152, T121 or T196 to establish correlation with the Chace indicator. Concrete for structures will not be rejected based on tests made in accordance with AASHTO T199. Concrete for incidental construction may be rejected based on an average of 3 or more tests made in accordance with AASHTO T199.

Air entraining agent may be added at the job site when permitted by the Engineer.

(C) Strength of Concrete

The compressive strength of the concrete will be considered the average compressive strength test results of two 6" x 12" cylinders, or two 4" x 8" cylinders if the aggregate size is not larger than size 57 or 57M. Make cylinders in accordance with AASHTO T23 from the concrete delivered to the work. Make cylinders at such frequencies as the Engineer may determine and cure them in accordance with AASHTO T23 as modified by the Department. Copies of these modified test procedures are available upon request from the Materials and Tests Unit.

Table 1000-1

Requirements For Concrete

Class of Concrete	Minimum compressive Strength at 28 days, psi	Maximum Water-Cement Ratio				Consistency Max. Slump, Inches			Min. Cement Content, Lbs/Yd^3	
		Air-Entrained Concrete		Non Air-Entrained Concrete		Vibrated	Non-Vibrated		Vibrated	Non-Vibrated
		Rounded Aggregate	Angular Aggregate	Rounded Aggregate	Angular Aggregate					
AA	4500	0.381	0.426	---	---	3.5	---		639 - 715	---
AA Slip Form	4500	0.381	0.426	---	---	1.5	---		639 - 715	---
Drilled Pier	4500	---	---	0.450	0.450	---	5 - 7 dry	7 - 9 wet	---	640 - 800
A	3000	0.488	0.532	0.550	0.594	3.5	4		564	602
B	2500	0.488	0.567	0.559	0.630	2.5	4		508	545
B Slip Formed	2500	0.488	0.567	---	---	1.5	---		508	---
Sand Lightweight	4500	---	0.420	---	---	4	---		715	---
Latex Modified	3000 (7day)	0.400	0.400	---	---	6	---		658	---
Flowable Fill excavatable	150 (max. @ 56 days)	as needed	as needed	as needed	as needed	---	flowable		---	40
Flowable Fill non-excavatable	125	as needed	as needed	as needed	as needed	---	flowable		---	100
Pavement	650 (flexural)	0.559	0.559	---	---	1.5 slip form	3.0 hand placed		526	---
Precast	See Table 1077-1	as needed	as needed	---	---	8	as needed		as needed	as needed
Prestress -6000	6000 or less	0.450	0.450	---	---	8			564	---
Prestress +6000	greater than 6000	0.400	0.400	---	---	8			564	---

When the average compressive strength of the concrete test cylinders is less than the minimum strength specified in Table 1000-1 and the Engineer determines it is within reasonably close conformity with strength requirements, concrete strength will be considered acceptable. When the Engineer determines average cylinder strength is not within reasonably close conformity with specified strength, the in-place concrete will be tested. Based on these test results, the concrete will either be accepted with no reduction in payment or accepted at a reduced unit price or rejected as set forth in Article 105-3.

(D) Temperature Requirements

The concrete temperature at the time of placing in the forms shall be not less than 50°F nor more than 95°F except where other temperatures are required by Articles 420-8, 420-9 and 420-15.

Do not place concrete without permission when the air temperature measured at the location of the concrete operation in the shade away from artificial heat is below 35°F. When such permission is granted, uniformly heat the aggregates and/or water to a temperature not higher than 150°F. Do not place heated concrete in the forms if the temperature is less than 55°F or more than 80°F.

(E) Elapsed Time for Placing Concrete

Deliver concrete to any monolithic unit of a structure at a rate that will permit proper handling, placing, and finishing of the concrete. Regulate the delivery so that the maximum interval between the placing of batches at the work site does not exceed 20 minutes.

Place concrete before the time between adding the mixing water to the mix and placing the concrete in the forms does not exceed that set forth in Table 1000-2.

(F) Use of Set Retarding Admixtures

Use an approved set retarding admixture in all concrete placed in the superstructure of bridges such that the concrete will remain workable until the entire operation of placing and finishing, including corrective measures, if necessary, has been completed. The Engineer may waive the use of set retarding admixture when conditions clearly indicate that it is not needed.

TABLE 1000-2 ELAPSED TIME FOR PLACING CONCRETE		
Air or Concrete Temperature Whichever is Higher	**Maximum Elapsed Time**	
	No Retarding Admixture Used	**Retarding Admixture Used**
90°F or above	30 minutes	1 hr. 15 minutes
80°F through 89°F	45 minutes	1 hr. 30 minutes
*79°F or below	60 minutes	1 hr. 45 minutes
**70°F through 79°F	60 minutes	1 hr. 45 minutes
**69°F or below	1 hr. 30 minutes	2 hr. 15 minutes
* Applicable to Class AA and A concrete. ** Applicable to Class B concrete.		

Other structural concrete may also contain an approved set retarding admixture when permitted by the Engineer.

Use a quantity of set retarding admixture within the range shown on the current list of approved admixtures issued by the Materials and Tests Unit.

(G) Use of Water Reducing Admixtures

By permission of the Engineer, the Contractor may use an approved water reducing admixture to facilitate placing and finishing.

Use a quantity of water reducing admixture within the range shown on the current list of approved admixtures issued by the Materials and Tests Unit.

(H) Use of Calcium Chloride

Calcium chloride may be used as a set accelerating agent where permitted by the Engineer. Use 1 lb. of calcium chloride per 100 lb. of cement except where lesser amounts are directed. Do not use calcium chloride where steel reinforcement, metal conduit, or other metals will be in contact with the concrete. Do not use calcium chloride in concrete that has a temperature higher than 70°F, or when the air temperature is greater than 70°F. Provide cold weather protection for concrete containing calcium chloride in the same manner as is provided for concrete without calcium chloride.

Use calcium chloride in liquid form. Use a solution of 1 pound or less of calcium chloride per 1 quart of water, and mix well. To avoid incompatibility with other additives, add the calcium chloride to the batch after all other ingredients have been put into the mixer.

(I) Use of Fly Ash

Unless otherwise specified, fly ash may be substituted for portland cement in all classes of concrete at a rate not to exceed 20% by weight of the required cement noted in Table 1000-1. Unless otherwise specified, substitute at least 1.2 pounds of fly ash per pound of cement replaced. Do not substitute fly ash for a portion of Type IP or IS cement or for portland cement in high early strength concrete.

Use the following table to determine the maximum allowable water-cementitious material (cement + fly ash) ratio for the classes of concrete listed. For all other classes, the maximum water-cementitious material ratio will be the same as the water-cement ratio listed in Table 1000-1.

	Maximum Water-Cementitious Material Ratio	
Class of Concrete	**Rounded Aggregate**	**Angular Aggregate**
AA & AA Slip Form	.366	.410
A	.469	.512
B & B Slip Form	.469	.545
Pavement	.538	.538

(J) Use of Ground Granulated Blast Furnace Slag

Unless otherwise specified, slag may be substituted pound for pound for portland cement in all classes of concrete at a rate not to exceed 50% by weight of the required cement. Do not exceed the water-cement ratio shown in Table 1000-1. Do not substitute slag for a portion of Type IP or IS cement or for portland cement in high early strength concrete.

(K) Use of Calcium Nitrite Corrosion Inhibitor

Units with calcium nitrite in a quantity less than specified are subject to rejection. Furnish concrete cylinders to the Engineer, in a quantity to be specified, to verify the concentrations of calcium nitrite in hardened concrete. Concrete that fails to contain calcium nitrite at the required concentrations as tested is subject to rejection. Use air-entraining, water-reducing, and/or set-controlling admixtures compatible with calcium nitrite solutions. Strictly adhere to the manufacturer's written recommendations regarding the use of admixtures, including storage, transportation and method of mixing. If preferred, use calcium nitrite, which acts as an accelerator, in conjunction with a retarder to control the set of concrete, as per the manufacturer's recommendation. Add an approved calcium nitrite corrosion inhibitor (30% solids) to the concrete mix at the batch plant for the bridge elements identified by the plan notes. Use the inhibitor at a minimum rate of 3.0 gal/yd^3. Ensure that the hardened concrete contains at least 5.1 lbs/yd^3 nitrite (NO_2) when tested in accordance with Materials and Tests Method Chem. C-20. The preceding paragraph does not apply to concrete used in prestressed concrete members. Concrete used in prestressed concrete members shall be tested in accordance with 1078-4(G).

1000-5 CONCRETE FOR MACHINE PLACED CURB, CURB AND GUTTER, AND PAVED DITCH

Use Class B Slip Form.

1000-6 HIGH EARLY STRENGTH PORTLAND CEMENT CONCRETE

Use high early strength portland cement concrete when required by contract. When not required, it may be used at the Contractor's option with approval of the Engineer.

For all classes of concrete, high early strength concrete may be produced by using Type III portland cement. To produce high early strength concrete with regular cement, use a higher class of concrete as follows:

> For Class A and Class B, use Class AA with a minimum cement content of 677 pounds per cubic yard; for Class B Slip Form, use Class AA Slip Form with a minimum cement content of 677 pounds per cubic yard. Other classes that lend themselves to high early strength with regular cement will be reviewed by the Engineer on a case-by-case basis.

1000-7 FLOWABLE FILL

Flowable fill consists of portland cement, water, pozzolan and/or fine aggregate, and, optionally, conventional concrete admixtures and/or a high-air entraining agent or foaming agent. Use it for filling underground storage tanks and pipe culverts and for backfilling culverts, bridge substructures, retaining walls, roadway trenches and for other applications where conventional fill material has traditionally been used.

1000-8 LATEX MODIFIED CONCRETE

(A) **Materials** Use materials that meet the requirements for the respective items in the *Standard Specifications* with the following exceptions:

Cement - Do not use Type III (high early strength).

Aggregate – Follow Section 1014 of the *Standard Specifications*, except provide coarse aggregate that meets the gradation for standard size No. 78M.

Fine Aggregate – Follow the *Standard Specifications*.

Latex Emulsion Admixture – Use a formulated latex admixture that is a non-hazardous, film forming, polymeric emulsion in water and is homogeneous and uniform in composition. Add all stabilizers at the point of manufacture.

Use a latex modifier conforming to the following requirements:

Polymer Type	Styrene Butadiene
	68 ±4% Styrene
	32 ±4% Butadiene
Average Polymer Particle Size	1500 to 2500 Angstroms
Emulsion Stabilizers	Anionic and non-ionic surfactants
Percent Solids	46.5 to 49.0
Weight per gallon, lbs at 75°F	8.40 to 8.60
pH	9.5 to 11.0

Shelf Life	2 Years
Color.	White

Provide a Type 5 Supplier's Certification for each load of latex emulsion admixture in accordance with Article 106-3 of the *Standard Specifications*. Test admixture samples to verify compliance with the specification requirements before use. Allow 7 days for sampling and testing after delivery to the project.

Do not allow the temperature of latex emulsion admixture to fall below 35°F at any time or exceed 85°F after delivery to the project.

For latex emulsion that has been in storage, use a transfer pump and lines to recirculate it before using.

Latex Modified Concrete – Use a workable mixture that meets the following requirements:

Cement Content, lbs/yd^3	658
Latex Emulsion Admixture, gal/yd^3	24.5
Air Content of Plastic Mix, %	3.5 - 6.5
Slump, inches	3 – 6
% Fine Aggregate as percent of total aggregate by weight	50 - 55
Minimum 7 day compressive strength, psi	3000
Water-Cement Ratio by weight, maximum	0.40

Measure the slump 4 to 5 minutes after discharge from the mixer.

Submit the latex modified concrete mix design, completed by the latex emulsion manufacturer, to the Engineer for review.

(B) **Equipment** Prior to beginning any work, obtain approval for all equipment to be used for deck preparation, mixing, placing, finishing, and curing the latex modified concrete.

Use sandblasting equipment capable of removing all clay, salt deposits, oil and grease deposits and all other foreign matter. Provide traps or separators to remove oil and water from the compressed air. Use traps or separators of adequate size and drain them periodically during operations. For proportioning and mixing, use self-contained, mobile, and continuously mixing equipment that meets the following requirements:

Use a self-propelled mixer that is capable of carrying sufficient unmixed dry, bulk cement, sand, coarse aggregate, latex modifier, and water to produce at least 6 yd^3 of concrete on site.

Use a mixer that is capable of positive measurement of cement introduced into the mix. Use a recording meter that is visible at all times and equipped with a ticket printout to indicate the quantity of cement.

Calibrate the mixers to accurately proportion the specified mix. Prior to placing latex modified concrete, perform calibration and yield tests under the Engineer's supervision in accordance with the Department's written instructions. Copies of these written instructions are available from the Materials and Tests Unit. Perform the calibration and yield tests using the material to be used on the project. Recalibrate the mixer after any major maintenance operation, on the mixer, anytime the source of materials changes, or as directed. Furnish all materials and equipment necessary to perform the calibrations and yield tests.

Use a mixer that controls the flow of water and latex emulsion into the mix. Measure the flow rate of water and the latex emulsion with a calibrated flowmeter coordinated with both the cement and aggregate feeding mechanisms and the mixer. Adjust the flow rate, as necessary, to control the slump and ensure that the water-cement ratios are met. In addition to flowmeters, use mixers with accumulative water and latex meters capable of indicating the number of gallons, to the nearest 0.1 gallon, introduced into the mixer. Filter water and latex with a suitable mesh filter before it flows through the accumulative water and latex meters.

Calibrate the mixer to automatically proportion and blend all components of the indicated composition on a continuous or intermittent basis as the finishing operation requires. Provide a mixer that discharges mixed material through a conventional chute and is capable of spraying water over the placement width as it moves ahead to ensure that the surface to be overlaid is wet prior to receiving the modified material.

Mount a tachometer on the unit to indicate the drive shaft speed.

Use adequate hand tools for placing and leveling concrete down to approximately the correct level for striking off with the screed.

Use a finishing machine that meets the approval of the Engineer and the requirements of the contract. Use a self-propelled finishing machine capable of forward and reverse movement under positive control. Use a machine with at least two finishing devices, one that is a vibrating screed and the other either a vibrating screed, oscillating screed, or one or more rotating cylindrical drums 48 inches long or less and operating between 1500 and 2500 vpm. Make certain the finishing machine can finish the surface to within 1 foot of the edges of the area being placed. Raise all screeds when the finishing machine is moving backwards over the screeded surface.

Use screeds with a vibration frequency that is variable between 3,000 and 6,000 vpm with positive controls. Use screeds with a metal covered bottom face not less than 4 inches wide. Provide screeds with positive control of the vertical position.

Use supporting rails for travelling of the finishing machine rigid enough to eliminate deflection from the weight of the machine.

Proportioning and Mixing of Modified Compositions

Meet the following requirements when proportioning and mixing modified materials:

Use mobile continuous mixers that accurately proportion all materials for the specified mixture. Operate the proportioning equipment at the manufacturer's

recommended speed verified with the tachometer during calibration and normal operations.

Yield checks and other checks are permitted.

1000-9 MEASURING MATERIALS

(A) Weighing Cement

Measure cement by weight on scales separate from those used for other materials, and in a hopper entirely free and independent of the hoppers used for weighing the aggregates. When the quantity of cement in a batch exceeds 30 percent of the full capacity of the scale, have the quantity of cement as indicated by the scale be within plus or minus 1 percent of the required weight. For smaller batches, have the quantity of cement as indicated by the scale be not less than the required amount or more than 4 percent in excess. Equip all beam type scales with a tare beam.

(B) Weighing Aggregates

Measure aggregates by weight. Base batch weights on saturated surface dry materials and which are the required weights plus the total weight of surface moisture contained in the aggregates. Have the individual aggregates, as weighed, be within plus or minus 2 percent of the required weights.

(C) Water

Measure water by volume or by weight. Have the quantity of water measured be within plus or minus 1 percent of the required amount.

(D) Admixture Dispensing Systems

Provide a separate dispensing system with separate fill and discharge lines for each type of admixture to be used, except that admixtures may be measured and introduced into the mix manually if approval has been obtained. Have each system be capable of measuring, displaying, and discharging the required amount of admixture into the mix. Keep dispensing systems clean and in good operating condition. Use a dispensing system that is either:

(1) Manually operated, self contained; or

(2) Semi automatic or automatic, self contained; or

(3) Interfaced to operate automatically with the concrete batching control panel.

Have the admixture dispenser dispense the required quantity of admixture for each concrete batch within an accuracy of plus or minus 3 percent. Check the accuracy of the dispenser as provided below. Check the accuracy at the point of discharge, or through a bypass valve suitable for obtaining a calibrated sample of admixture and at the volumes normally used for one half mixer capacity and for full mixer capacity. Determine the accuracy at the time of installation, and check daily during the early part of each day's operation.

Include in each system a graduated measuring unit into which the admixture is batched to permit a quick visual check of accuracy prior to its discharge.

Have the measuring unit be clearly graduated and be of sufficient size to hold the maximum anticipated dose for 1 batch. Clearly mark the measuring unit for the type of admixture to be used.

Control the discharge sequence so that an admixture will not be brought into contact with raw cement or another admixture before being diluted through contact with the mixing water in the mixer. Where 2 types of admixtures are being used, do not discharge them into the mix simultaneously. Add the air entraining agent with the first addition of water and add any other chemical admixture with the final addition of water, unless otherwise permitted.

Construct the discharge lines to completely empty after each cycle. Locate the admixture dispensing systems so that the batching plant operator will have a visual verification of the actual quantity of admixture batched.

Use air entraining admixtures in accordance with the manufacturer's recommendations and in such quantity to provide the specified air content in freshly mixed concrete. Use a quantity of set retarding admixture and of water reducing admixture per 100 lb. of cement that is within the range recommended on the current list of approved admixtures issued by the Materials and Tests Unit.

1000-10 BATCHING PLANT

(A) General

Plants located on the Department rights-of-way shall conform to the requirements of Article 107-3.

Have ready mixed concrete plants inspected and approved by the Department before they are used to produce concrete, either paving, structural or incidental, for the project. Have plants meet all the applicable requirements of the Specifications, and in addition have each ready mix plant provide at least 3 acceptable truck mixers or truck agitators available for use. Use trucks that have an identifying number. Plants approved by the Department will be placed on a list of approved plants that will be made available to the Contractor. All plants will be subject to reinspection at intervals selected by the Engineer. Re-approval after each inspection will be contingent on continuing compliance with the Specifications.

(B) Bins and Hoppers

Provide bins with separate compartments for fine aggregates and for each required size of coarse aggregate in the batching plant. Design each compartment to discharge efficiently and freely into the weighing hopper. Provide control so that, as the quantity desired is being approached, the material may be added slowly and shut off with precision. Construct weighing hoppers to eliminate accumulation of tare materials and to discharge fully unless otherwise permitted. Provide a port or other opening for removing an overload of any one of the several materials from the hopper.

(C) Scales

Use either the beam type, load cell type or the springless dial type scales for weighing aggregates and cement. Have the minimum graduation on beam or dial be not more than 0.1 percent of the total capacity of the scale. Methods of weighing, other than beam or springless dial scales, may be approved by the Engineer provided they meet the required weighing tolerances. Have the scales be accurate within 0.5 percent under operating conditions. Make available ten 50 pound test weights at the plant for checking accuracy. Use test weights which meet the US Bureau of Standards requirements for calibrating and testing equipment. Keep all exposed fulcrums, clevises, and similar working parts of scales clean. When beam type scales are used, make provisions for indicating to the operator that the required load in the weighing hopper is being approached. Have the device indicate at least the last 50 pounds of load, and design it to give a positive indication of overload of the scales. During charging of the hopper, have all indicating devices in full view of the operator and provide convenient access to all controls. Have the indicating devices in the immediate vicinity of the operator so that they are easily readable by the operator.

(D) Water Measuring Devices

Use devices for measurement of the water which are readily adjustable and are capable of being set to deliver the required amount and cut off the flow automatically when this amount has been discharged. Under all operating conditions the device shall have accuracy within 1 percent of the quantity of water required for the batch. Arrange the device so that variable pressures in the water supply line will not affect the measurements. Use measuring tanks of adequate capacity to furnish the maximum mixing water required and equip them with outside taps and valves to provide for checking their calibration unless other means are provided for readily and accurately determining the amounts in the tank.

1000-11 MIXERS AND AGITATORS

(A) General

Mixers are defined as equipment to mix concrete and may be stationary or truck mounted. Agitators are defined as equipment used to haul central mixed concrete and may be truck mixers or truck agitators. Provide a metal plate or plates attached to each mixer and agitator in a prominent place on which the manufacturer has plainly marked the mixing speed of the drum or paddles and the maximum capacity of the drum or container in terms of volume of mixed concrete. On truck mixers and agitators, show the manufacturer's recommended agitating and mixing speed of rotation of the mixing drum or blades. Equip stationary mixers with an acceptable timing device that will not permit the batch to be discharged until the specified mixing time has elapsed. Equip truck mixers with counters to verify the number of revolutions of the drum or blades. Actuate the counters at the initial time the drums have reached mixing speed.

Examine mixers and agitators periodically for changes in condition due to accumulation of hard concrete or mortar, wear of blades, or any other condition which decreases mixing efficiency. Mixers are unacceptable when the radial height

or other dimension of the blade has worn below 90 percent of the original dimension. This radial height does not include any lips on the blade, and is the height of the blade running perpendicular to the shell of the drum. Where such conditions are found, do not use the units until they are corrected.

Also examine mixers and agitators periodically for general mechanical condition, including water measuring and discharge apparatus, identifying number on trucks, condition of the blades, speed of rotation of the drum, and condition of the drum.

(B) Mixer Capacity

Do not load truck mixers with concrete with more than 63 percent of the gross volume of the drum. Use mixers capable of combining the ingredients of the concrete into a thoroughly mixed and uniform mass and of discharging the concrete with a satisfactory degree of uniformity. Use stationary mixers, when loaded at the manufacturer's guaranteed mixing capacity and the concrete mixed for the prescribed mixing time, capable of combining the ingredients of the concrete into a thoroughly mixed and uniform mass and discharging the concrete with satisfactory uniformity.

Use at least 20 percent of the rated mixing capacity as the minimum quantity of concrete permitted to be mixed or agitated in any mixer.

(C) Agitator Capacity

Load the agitator to not exceed 80 percent of the gross drum volume and have it be capable of maintaining the concrete in a thoroughly mixed and uniform mass and of discharging the concrete with a satisfactory degree of uniformity.

(D) Consistency Tests

The Engineer may, from time to time, make slump tests to measure consistency of the concrete. Take individual samples at approximately the 1/5th point, the midpoint, and the 4/5th point of the load, using AASHTO T119. Such tests will be made within 20 minutes of discharge of that portion of the load. If the results vary by more than 1" in slump, do not use the mixer or agitator unless the condition is corrected.

1000-12 MIXING AND DELIVERY

(A) General

Mix and deliver concrete to the site of the work by one of the following methods, except where other methods are approved. Maintain responsibility for controlling the materials and operations as to produce uniform concrete meeting Specifications requirements.

When concrete is being produced for structures and incidental construction in accordance with the requirements of Article 1000-4, have present during all batching operations a Certified Concrete Batch Technician employed by the Contractor or concrete supplier. During batching and delivery, the sole duty of this employee is to supervise the production and control of the concrete. Perform moisture tests, adjust mix proportions of aggregates for free moisture, complete and sign Batch Tickets (M & T Form 903) or approved delivery tickets, and assure quality control of the batching. Delivery tickets will be permitted in lieu of batch tickets (M & T

Form 903) provided they have been reviewed and approved by the Materials and Tests Unit. The Division of Highways certifies technicians who satisfactorily complete examinations prepared and administered by the Division of Highways.

(1) Central Mixed Concrete

Concrete that is mixed completely in a stationary mixer and the mixed concrete transported to the point of delivery in a truck agitator or in a truck mixer operating at agitating speed or in non agitating equipment approved by the Engineer. Perform mixing within the capacity and at the mixing speeds recommended by the manufacturer.

(2) Transit Mixed Concrete

Concrete that is mixed completely in a truck mixer while at the batching plant, in transit, or at the work site.

(3) Shrink Mixed Concrete

Concrete that is mixed partially in a stationary mixer at a central mixing plant and completed as transit mixed concrete. Place all ingredients for a batch in the stationary mixer and partially mix before any concrete is discharged to the truck mixer, and do not exceed the rated capacity of the equipment for the batch size. The mixing time at the stationary mixer may be reduced to the minimum necessary to intermingle the ingredients, and the mixing completed in the truck mixer. Use the number of mixing revolutions in the truck mixer as specified for transit mixed concrete or reduce as indicated by mixer performance tests.

(B) Mixing Time for Central Mixed Concrete

Mixing time begins when all solid materials are in the mixing compartment and ends when any part of the concrete begins to discharge. In charging the mixer water will enter in advance of cement and aggregate, and have substantially all the water in the drum before one-third of the specified mixing time has elapsed. Count transfer time in multiple drum mixers as part of the mixing time.

Where mixer performance tests are not made, use a minimum mixing time of 90 seconds, providing that blending of materials during charging is achieved to the satisfaction of the Engineer. The minimum mixing time for an individual mixer is that which, as shown by mixer performance tests, will produce concrete meeting the requirements of Table 1000-3, except that the mixing time shall not be less than 50 seconds under any circumstances. Maximum mixing time excluding discharge time is 150 seconds.

Sampling and testing for mixer performance tests will be done as provided below. Charge the mixer to its rated capacity with the materials and proportions to be used in the work and mixed at the recommended mixing speed to the target time. Stop mixing and begin discharging. Two samples of sufficient size to make the required tests will be taken after discharge of approximately 15 and 85 percent of the load.

TABLE 1000-3

REQUIREMENTS FOR UNIFORMITY OF CONCRETE

Tests	Maximum Permissible Difference in Test Samples
Air content, percent by volume of Concrete (AASHTO T152)	1.0%
Slump, inches (AASHTO T119)	1.0"
Coarse aggregate content, portion by weight of each sample retained on the No. 4 sieve, percent (AASHTO M157)	6.0%
Weight per cubic foot (AASHTO T121)	1.0 lb.
Average compressive strength at 7 days, percent of average (AASHTO T22 and T23)	10.0%*

* Tentative approval may be granted pending 7 day compressive strength tests.

Each of the 2 samples of concrete will be separately tested for the properties listed in Table 1000-3. Tests will be conducted in accordance with the test procedures specified in Table 1000-3 or procedures established by the Materials and Tests Unit.

The mixer performance test described above will be performed on a minimum of 2 batches of concrete. For the performance test to be acceptable, have all tests in each batch tested meet the requirements listed above.

The Engineer may recheck mixer performance at any time when in his opinion satisfactory mixing is not being accomplished.

Where satisfactory mixing cannot be accomplished in 90 seconds, the Engineer may increase the mixing time or require that the mixer be repaired or replaced before any further mixing can be done.

(C) Mixing; Truck Mixers and Truck Agitators

When a truck mixer is used for complete mixing, mix each batch of concrete for at least 70 revolutions of the drum or blades at the rate of rotation designated by the manufacturer of the equipment as mixing speed, unless otherwise directed by the Engineer. Unless the mixer is equipped with a counter which will distinguish between mixing and agitating speeds, perform the minimum required number of revolutions of the drum at mixing speed as directed, either at the batching plant before the mixer leaves for the work site and/or at the work site before the concrete is discharged. Perform any additional mixing at the speed designated by the

manufacturer of the equipment as agitating speed. Put all materials including mixing water in the drum before actuating the revolution counter for determining the number of revolutions of the drum.

When a truck mixer or truck agitator is used to transport concrete that has been completely mixed in a stationary mixer, perform mixing during transport at agitating speed.

Provide concrete, when discharged from truck mixers or truck agitators, of the consistency and workability required for the work. Control the rate of discharge of the plastic concrete from the mixer drum by the speed or rotation of the drum in the discharge direction with the discharge gate fully open. If additional mixing water is necessary to produce the slump necessary for proper placement, perform it only with permission, and rotate the truck mixer drum a minimum of 25 revolutions at mixing speed before discharge of any concrete. Additional mixing water will be allowed only if the maximum specified water content per cubic yard is not exceeded.

(D) Delivery

Use a ticket system for recording the transportation of batches from the proportioning plant to the site of the work. Use tickets furnished by the Engineer and fill it out in accordance with instructions issued by the Engineer. Issue the tickets to the truck operator at the proportioning plant for each load and have them signed by the plant inspector, which will signify that the concrete in the truck has been inspected prior to departure. Have each ticket show the time batching was completed and if transit mixed, the number of revolutions at mixing speed, if any, at the plant. Deliver the tickets to the inspector at the site of the work. Do not use loads which do not carry such tickets and loads which do not arrive in satisfactory condition within the time limits specified in the work.

SECTION 1005
GENERAL REQUIREMENTS FOR AGGREGATE

1005-1 GENERAL

Provide aggregates meeting the applicable requirements of this section except where otherwise required.

Obtain aggregates from sources participating in the Department's Aggregate Quality Control/Quality Assurance Program (Aggregate QC/QA program) as described in Article 1006. Obtain aggregates from pre-approved sources, or have the source approved prior to use. Approval of such sources is based not only on the quality of the aggregate, but also on satisfactory production facilities and procedures. A list of approved aggregate sources participating in the Department's Aggregate Quality Control/Quality Assurance Program in North Carolina and adjoining states is available from the Department's Laboratory in Raleigh. This list includes aggregates meeting Specification requirements but whose use is restricted due to history of unsatisfactory service performance. Use of aggregates is allowed in the work provided they have been properly stockpiled in units of

not less than 300 tons and tests of representative samples of these aggregates indicate satisfactory compliance with the Specifications and the source meets all the requirements of the Aggregate Quality Control/Quality Assurance Program.

Separate aggregate containing rock of more than 1 identifiable rock type or particles of visibly different degrees of weathering in amounts of 10 percent or more into each individual type. Aggregate is acceptable only if each type does not exceed the percentage of wear specified for a particular use.

Blended aggregates from different sources is allowed if all aggregates meet the Specifications for soundness or resistance to abrasion.

For construction of approved stockpiles of non-asphalt type bases refer to the *Construction Manual*.

1005-2 HANDLING AND STORING AGGREGATES

Handle and stockpile aggregates in such a manner to minimize segregation.

Provide sites for aggregate stockpiles that are cleared, grubbed, and cleaned with a firm, smooth, and well drained ground surface. Maintain a cover of at least 3" of aggregate over the ground surface to avoid the inclusion of soil or foreign material. Operate trucks or other equipment on a stockpile in an acceptable manner.

Space or separate with suitable walls or partitions stockpiles of different types or sizes of aggregates to prevent the mixing of the aggregates. Identify stockpiles with signs that can be read from a distance of at least 50 feet from the pile.

Do not allow the stockpile to become contaminated with foreign matter or degrade excessively. Failure of aggregate samples to meet all gradation requirements due to excessive degradation will be determined by sieve tests of samples taken from any portion of the stockpile and is cause for discontinuance of such stockpiling procedure.

1005-3 GRADATION

Grade all standard sizes of aggregate to meet the requirements of Table 1005-1 or Table 1005-2. Comparison of individual Producer Quality Control Samples and the corresponding Department Quality Assurance Sample shall meet the requirements of Table 1005-3 or Table 1005-4 as described in the *Aggregate QC/QA Program Manual.*

1005-4 TESTING

(A) General

Aggregates will be tested in accordance with the requirements of the Table shown below except where other test procedures are required by other articles covering a particular application.

TEST	TEST METHOD
Gradation	AASHTO T27 AND T11; AASHTO T88 As Modified* For Base Course and Stabilizer
Liquid Limit	AASHTO T89 As Modified
Plasticity Index	AASHTO T90
Resistance to Abrasion (Percentage of Wear)	AASHTO T96
Soundness	AASHTO T104 Using Sodium Sulfate

* Copies of modified test procedures are available from the Materials and Tests Unit

TABLE 1005-1
AGGREGATE GRADATION, COARSE AGGREGATE

STD. SIZE #	PERCENTAGE OF TOTAL BY WEIGHT OF PASSING																REMARKS
	2"	1 1/2"	1"	3/4"	1/2"	3/8"	#4	#8	#10	#16	#30	#40	#50	#80	#100	#200	
4	100	90-100	20-55	0-15		0-5										0-*0.6	Asphalt Plant Mix Pavement
467M	100	95-100		35-70		0-30	0-5									0-*0.6	Asphalt Plant Mix Pavement
5		100	90-100	20-55	0-10	0-5										0-*0.6	AST Mat coat, Sediment Control Stone
57		100	95-100		25-60		0-10	0-5								0-*0.6	Str. Conc., Shoulder Drain, Sediment Control Stone
57M		100	95-100		25-45		0-10	0-5								0-*0.6	P. C. Concrete Pavement
6M			100	90-100	20-55	0-20	0-8									*	AST
67			100	90-100		20-55	0-10	0-5								0-*0.6	Str. Conc., Asphalt Plant Mix Pavement.
78M				100	98-100	75-100	20-45	0-15								0-*0.6	Asphalt Plant Mix Pavement, AST Weep Hole Drains, Str. Concrete
14M						100	35-70	5-20		0-8						*	* AST
ABC		100	75-97		55-80		35-55		25-45			14-30				4-12**	Aggregate. Stabilization Aggregate/Base Course Asphalt Plant Mix Pavement
ABC(M)		100	75-100		45-79		20- 40		0-25							0-12**	Maintenance Stabilization

*When these sizes of aggregate are used for portland cement concrete, asphalt treatment, and asphalt plant mix, the requirements pertaining to material passing the No. 200 sieve are as follows:

(A) When tested during production, do not have the amount of material passing through the No. 200 sieve be more than 0.6% by weight.

(B) When tested in a stockpile at the quarry site, do not have the amount of material passing through the No. 200 sieve be more than 1.0% by weight and use material that consists mainly of rock dust produced through normal handling of the aggregate.

(C) When tested at the job site prior to use, the amount of material passing the No. 200 sieve shall:

(1) Be not greater than 1.5% for coarse aggregate used in portland cement concrete or asphalt surface treatment.

(2) Be not greater than 2.0% for coarse aggregate used in asphalt plant mix.

(3) Consist essentially of rock dust produced through normal handling of the aggregate.

(D) If a stockpile at the job site is found to contain in excess of the specified amount of material passing the No. 200 sieve prior to use, the Engineer may approve its use provided:

(1) For coarse aggregate used in portland cement concrete, the total percentage by weight passing the No. 200 sieve in the combined coarse and fine aggregate in the mix does not exceed 2.0%, and provided no increase in water-cement ratio is required by the use of this coarse aggregate.

(2) For coarse aggregate used in asphalt plant mix, the total percentage by weight of minus No. 200 material in the plant mix being produced, as determined by the extraction test, can be maintained within the limits allowed by the job mix formula.

** In addition to the gradation requirements, the material passing the No. 40 sieve shall not have a liquid limit in excess of 30 nor a plasticity index in excess of 6. For size ABC coarse aggregate used in asphalt plant mix, when tested during production, in a stockpile at the quarry site, or at the job site prior to use, the amount of material passing the No. 200 sieve shall be from 0.0% to 12.0% by weight and the gradation requirements for material passing the No. 10 sieve (soil mortar) which are shown in Section 1010 for aggregate base course will not apply. For size ABC coarse aggregate not used in asphalt plant mix, the gradation requirements for material passing the No. 10 sieve (soil mortar) will be as shown in Section 1010, 40-84% passing the No. 40 sieve and 11-35% passing the No. 200 sieve.

TABLE 1005-2
AGGREGATE GRADATION FINE AGGREGATE

STD. SIZE #	PERCENTAGE OF TOTAL BY WEIGHT PASSING											REMARKS
	3/8"	#4	#8	#10	#16	#30	#40	#50	#80	#100	#200	
1S	100	90-100			40-85			0-20			0-3	Blotting Sand, Asphalt Retreatment
2S	100	95-100	80-100		45-95	25-75		5-30		0 .010	0-3	Concrete, Sub-surface Drainage, Blotting Sand
2MS		95-100	80-100		45-95	25-75		5-35		0.-.020	0-*8	Concrete
4S		100	95-100					15-45		0-10	0-5	Mortar

* For Manufactured Fine Aggregate used In portland cement concrete

When tested during production the amount of material passing the No. 200 sieve shall not be greater than 8%. When tested at the job site prior to use, the amount of material passing the No. 200 sieve shall not be greater than 10% and shall consist of the dust of fracture, and be essentially free from clay or shale. The minimum percent shown for material passing the No. 50 and No. 100 sieves may be reduced to 5 and 0, respectively, if the aggregate is to be used in air-entrained concrete containing more than 400 pounds of cementitious material per cubic yard or in non-air entrained concrete containing more than 500 pounds of cementitious material per cubic yard or as subdrain fine aggregate.

Table 1005-3
Tolerances for Comparisons of Coarse Aggregate QC/QA Gradations

Sieve Sizes	ABC	#4	#467M	#5	#57 #57M	#6	#14M	#67	#78M
2"									
1 1/2"		+/- 2	+/- 2		+/- 2				
1"	+/- 4	+/- 4		+/- 2	+/- 3			+/- 2	
3/4"		+/- 4	+/- 5	+/- 5		+/- 3		+/- 3	+/- 2
1/2"	+/- 5			+/- 2	+/- 5	+/- 4			+/- 3
3/8"		+/- 2	+/- 3	+/- 2		+/- 4	+/- 3	+/- 5	+/- 3
#4	+/- 6		+/- 2		+/- 3	+/- 2	+/- 5	+/- 3	+/- 5
#8					+/- 3		+/- 5	+/- 3	+/- 3
#10	+/- 5								
#40	+/- 5								
#80									
#200	+/- 3	+/- 0.5	+/- 0.5	+/- 0.5	+/- 0.5	+/- 0.5	+/- 0.5	+/- 0.5	+/- 0.5
Soil Mortar									
#40	+/- 6								
#200	+/- 5								
LL	+/- 4								

Table 1005-4
Tolerances for Comparisons of Fine Aggregate QC/QA Gradations

Sieve Sizes	Dry Screenings	Washed Screenings	Asphalt Sand	1S	2S	2MS	4S
1/2"							
3/8"							
#4	+/- 2	+/- 2	+/- 2				
#8	+/- 6	+/- 6	+/- 6	+/- 1	+/- 1	+/- 1	+/- 2
#10							
#16				+/- 3	+/- 3	+/- 3	+/- 3
#30				+/- 3	+/- 3	+/- 3	+/- 3
#40	+/- 6	+/- 6	+/- 6				
#50				+/- 2	+/- 2	+/- 2	+/- 3
#80	+/-4	+/-4	+/-4				
#100				+/- 1	+/- 1	+/- 1	+/- 2
#200	+/- 2	+/- 2	+/- 2	+/- 1	+/- 1	+/- 1	+/- 1

SECTION 1006
AGGREGATE QUALITY CONTROL/QUALITY ASSURANCE

1006-1 GENERAL DESCRIPTION

The Aggregate Quality Control/Quality Assurance Program is designed to give aggregate producers more responsibility for controlling the quality of material they produce and to utilize the quality control information they provide in the acceptance process by the Department. It requires aggregate producers to perform quality control sampling, testing and record keeping on aggregates they ship for use by the Department. Also, it requires the Department to perform quality assurance sampling, testing and record keeping confirming the performance of the producers' control plan. The program is described in the *Aggregate Quality Control/Quality Assurance Program Manual*. The program has two levels.

Section I of the program is designed for Aggregate Producers providing Clean Coarse or Fine Aggregates for use on or in products such as asphalt, concrete, block, etc., that are utilized on the Department's right of way. Asphalt sand that is produced by and utilized by the same asphalt producer shall be tested according to the requirements of the *Hot Mix Asphalt Quality Management System Manual*.

Section II of this program is designed for Aggregate Producers providing any type of Aggregate Base, including Cement Treated, material that is utilized on any type of the Department's Maintenance or Contract projects whether purchased by a Contractor or sold directly to the Department.

The types of samples and the lot sizes required by both levels are described in detail in the *Aggregate Quality Control/Quality Assurance Program Manual* and in other sections of the *Specifications*.

It is the intent of the program that acceptance or rejection of material be based on the total program. Therefore, a comparison of the Quality Control, Quality Assurance, and

other sample data may be used by the Department for acceptance or rejection of a lot of material.

Participation in this program does not relieve the producer of the responsibility of complying with all requirements of the Department's Specifications.

1006-2 PROGRAM REQUIREMENTS

(A) Basic Requirements

There are three basic requirements for approval:

(1) The plant shall have an approved in-house quality control plan.

(2) --- The plant shall have a certified laboratory or have written approval to utilize a certified laboratory at another plant.

(3) --- The plant shall have a certified quality control technician.

(B) Quality Control Plan

The Producer shall prepare a written quality control plan. The plan may be generic, but shall be site specific. The plan shall indicate in detail how the Producer proposes to control the equipment, materials, and production methods to insure that the specified products are obtained. The plan shall list the personnel responsible for production and quality control at the site and include information on how to contact each person. The following specific information shall also be included in the plan:

(1) Identification of the physical location of the source, to include a description of the property site and reference to the nearest identifiable points such as highways and towns.

(2) The type of sign used to identify each stockpile or bin identifying it as intended for Department usage.

(3) A loading and shipping control plan which includes a description of the methods by which the products are to be loaded and shipped for use by the Department, including safeguards against loading improper aggregate, contamination, degradation, and segregation of the aggregate. The plan shall also include methods of insuring that all products are accurately identified and that all shipping units are clean.

(4) A plan for dealing with quality control sample failures. This plan shall include how the Producer plans to initiate an immediate investigation and how the Producer will implement corrective action to remedy the cause of the problem.

(C) Certified Laboratory

The Program requires all tests to be conducted at laboratories certified by the Department. It is expected that each source, including distribution yards, will establish and maintain its own laboratory for the performance of quality control testing, but the Department will consider a producer's request to utilize a certified

laboratory at one of their other sources in the same general vicinity. The Producer shall make this request in writing and have written Department approval before testing aggregates off site. The equipment required for a certified laboratory is listed in the *Aggregate QC/QA Program Manual*. Records on instrument calibration and maintenance and sample collection and analysis shall be maintained at the laboratory. The Department may require a demonstration of the equipment.

(D) Quality Control Technician

All samples shall be taken and tested by quality control technicians certified by the Department. The Producer shall designate and identify the quality control technicians responsible at each plant. It is imperative that Department sampling and testing procedures be followed and that Department approved equipment be used in order to reduce the number of possible causes of differences between the producer's quality control results and the Department's quality assurance results.

(E) Plant Approval Process

The approval process requires the Producer to write the State Materials Engineer at NCDOT Materials and Tests Unit, 1801 Blue Ridge Road, Raleigh, NC 27607, requesting the plant be considered for acceptance into the program. The letter shall identify the specific products that are to be produced. Two copies of the Producer's written quality control plan shall be submitted with the request for approval.

A source shall be on the Department Approved Source List before it will be considered for approval for the QC/QA Program.

The Department will review the Producer's written quality control plan and if it is approved, an on-site inspection will be scheduled. This on-site inspection will verify that the Producer's quality control plan has been implemented and is being followed and that at least one certified quality control technician is on site and will be present when material is being shipped under this program. The laboratory will be inspected and certified if it meets the requirements and has not already been certified. If either the Producer's quality control plan or laboratory do not meet Department requirements, the Producer will be informed of the deficiencies in writing. Once the deficiencies have been addressed, the Producer may again request approval in writing to the State Materials Engineer.

(F) Certification for Participation in the Aggregate QC/QA Program

If the Department has approved the Producer's written quality control plan and the on-site inspection confirms that the initial program requirements have been met, the Department will certify the plant for participation in the program. At the end of the year, and each subsequent year after receipt of the Plant Ownership Update, the Department will conduct another on-site inspection and if all requirements are continuing to be met, the plant will be recertified for participation in the program for another year. Random inspections may be conducted at any time by the Department to verify compliance with the program requirements.

A copy of the Plant Ownership Update Form shall be submitted by October 31st of each year.

SECTION 1008
AGGREGATE BASE COURSE FOR STABILIZATION

1008-1 AGGREGATE STABILIZATION

(A) General

Aggregates consist of crushed stone, crushed or uncrushed gravel, or other similar material having hard, strong, durable particles free of adherent coatings.

The Contractor may, at his option, furnish aggregates directly to the road or from a stockpile.

Supply aggregates from approved sources participating in the Department's Aggregate Quality Control/Quality Assurance Program (Aggregate QC/QA Program) in accordance with the requirements of Sections 1005 and 1006. Sources will not be approved unless the material has satisfactory soundness and satisfactory resistance to abrasion. Satisfactory soundness will be considered to be a loss in weight of not greater than 15 percent when subject to 5 alternations of the soundness test. Satisfactory resistance to abrasion will be considered to be a percentage of wear of not greater than 55 percent.

(B) Sampling and Acceptance

Sampling and acceptance for the determination of gradation, liquid limit, and plasticity index will be performed as provided in Subarticle 1008-1(D).

(C) Testing

Quality Control Samples will be tested at a Department Certified Laboratory according to the *Aggregate QC/QA Program Manual*. Assurance Samples will be tested at a Department laboratory.

(D) Department Roadway Assurance Sampling

For sampling and acceptance purposes, a lot will be 5,000 tons or fraction thereof. For each lot of aggregate delivered to the project, 2 samples will be taken at random intervals. The first sample will be taken from the first 2,500 tons or first half of the lot; the second sample will be taken from the second 2,500 tons or second half of the lot. The gradation test results of these samples will be averaged and the average will be used to determine the acceptability of the lot.

It is intended that the gradation of aggregates be in the middle of the range shown in Column B of Table 1008-1. If, however, the average test results for a lot are within the limits shown in Column B of Table 1008-1, the gradation of the lot will be considered as acceptable.

TABLE 1008-1
AGGREGATE BASE COURSE FOR STABILIZATION
GRADATION ACCEPTANCE CRITERIA

Column A Sieve Size	Column B % Passing
l 1/2"	100
1"	72-100
1/2"	51-83
No. 4	35-60
No. 10	20-50
No. 40	10-34
No. 200	3-13
Material Passing No. 40 Sieve	
L. L.	0-30
P. I.	0-6

When the average test results for a lot exceeds any of the limits shown in Column B of Table 1008-1, the lot will be rejected. The rejected lot will be considered for acceptance only after corrective material has been furnished, placed, and mixed with the in place aggregate to an acceptable gradation.

The liquid limit and plasticity index requirements for the material passing the No. 40 sieve shown in Table 1008-1 is for each individual sample. The results will not be averaged and if any individual test result indicates a value exceeding these requirements is cause for rejection of the entire lot.

SECTION 1010
AGGREGATE FOR NON-ASPHALT FLEXIBLE TYPE BASES

1010-1 AGGREGATE BASE COURSE--GENERAL

(A) General Requirements

Aggregate base course material consists of crushed stone, crushed or uncrushed gravel, or other similar material having hard, strong, durable particles free of adherent coatings.

Produce aggregate base course material in accordance with the requirements for aggregate unless otherwise specified in the Specifications.

Provide aggregates from approved sources participating in the Department's Aggregate Quality Control/Quality Assurance Program (Aggregate QC/QA Program) in accordance with the requirements of Section 1005 and Section 1006. Sources will not be approved unless the material has satisfactory soundness and resistance to abrasion. Satisfactory soundness will be considered to be a weighted average loss of

not greater than 15 percent when subjected to 5 alternations of the soundness test. Satisfactory resistance to abrasion will be considered to be a percentage of wear of not greater than 55 percent.

(B) Testing

Quality Control Samples will be tested at a Department Certified Laboratory according to the Aggregate QC/QA Program. Assurance Samples will be tested at a Department laboratory.

TABLE 1010-1

AGGREGATE BASE COURSE
GRADATION ACCEPTANCE RANGES

Column A	Column B % Passing	Column C % Passing	Column D Range	Column E
1 1/2"	100	98-100	3	1
1"	75-97	72-100	15	1
1/2"	55-80	51-83	20	1
# 4	35-55	35-60	18	3
# 10	25-45	20-50	18	2
# 40	14-30	10-34	14	3
# 200	4-12	3-13	7	5
Material Passing No. 10 Sieve (Soil Mortar)				
# 40	40-84	36-86	35	2
# 200	11-35	10-36	20	2
Material Passing No. 40 Sieve				
L. L.	0-30	0-30	–	–
P. I.	0-6	0-6	–	–

1010-2 AGGREGATE BASE COURSE

Aggregate Base Course is aggregate upon which no restrictions are placed on production or stockpiling except as provided for in Sections 1005 and 1006.

(A) Producer's Quality Control Sampling

Plant Sampling The lot size for ABC will be 2,000 tons of material, or a fraction thereof, shipped. The certified plant technician is to obtain a pair of Quality Control (QC) samples, labeled A and B, each weighing a minimum of 70 lbs. from each lot of ABC. Each sample is to be split into two halves, using procedures outlined in Exhibit C of the *Aggregate QC/QA Program Manual*. Each half is to be clearly identified.

The other half of the samples will be retained and made available to the Department.

These retained samples will serve as the pool from which random Quality Assurance samples will be obtained by the Department. The Department's Quality Assurance testing is discussed in the *Aggregate QC/QA Program Manual*.

Price Reductions and Corrections If the Quality Control samples do not meet the gradation requirements of Column B, or the range requirements of Column D, or the LL and PI requirements of Column B of Table 1010-1 of the Specifications, the procedures are as follows

Gradation For the lot to be acceptable, the average test results shall meet the gradation requirements shown in Column B of Table 1010-1. When the average test result exceeds the gradation limits given in Column B but falls within the limits given in Column C, the lot will be rejected and shall be removed and replaced by the Contractor, or at the option of the Contractor, the lot may be left in place and the material will be considered as being reasonably acceptable in accordance with the requirements of Article 105-3, and an adjustment in contract unit price will be made as follows:

The number of points shown in Column E of Table 1010-1 will be assigned to the lot involved on an accumulative basis for each percent that the base material is outside the gradation range shown in Column B. Price adjustments will be made by reducing the contract unit price by 2 percent for each point assigned. The unit price adjustment for average gradation will be in addition to any price adjustment determined necessary for nonuniform base material (range).

When the test results for a lot exceed the gradation shown in Column C of Table 1010-1, the lot will be rejected and shall be removed and replaced by the Contractor at no cost to the Department or at the option of the Contractor, the lot may be corrected as described below.

Range When the test results for the 2 samples used to determine the average test result for acceptance exceed the range established by Column D of Table 1010-1, the lot, at the option of the Contractor, may be corrected or judged to be nonuniform and acceptance will be made in accordance with Article 105-3 and an adjustment in contract unit price will be made as follows:

The number of points shown in Column E of Table 1010-1 will be assigned to the lot involved on an accumulative basis for each percent that the range between the test results of the 2 samples exceeds those values given in Column D. Price adjustments will be made by reducing the contract unit price by 2 percent for each point assigned. The unit price adjustment for nonuniform base material will be in addition to any price adjustment determined necessary for average gradation (gradation).

LL/PI In addition to the gradation acceptance requirements listed in Table 1010-1, the material passing the No. 40 sieve shall not have a Liquid Limit in excess of 30 or a plasticity index in excess of 6. If any individual test result indicates values exceeding these, the lot will be rejected and shall be removed and replaced by the Contractor.

Total Points Any lot having an assigned accumulative gradation and range total of more than 25 points will be rejected and shall be removed and replaced by the

Contractor at no cost to the Department or at the option of the Contractor, the lot may be corrected.

Roadway Correction When the Contractor chooses the option to correct the sublot, the Contractor will take 2 random Roadway Quality Control Samples from within the corrected sublot. When the average test results of the Contractor's two Roadway Samples fall within the gradation limits as shown in Column B of Table 1010-1, the range limits as shown in Column D of Table 1010-1, and the LL and PI meet the requirements of Subarticle 1010-(4)(B)(3), the corrected sublot will be acceptable for Quality Assurance Sampling by the Department.

The Contractor shall correct a QC lot on the roadway only once.

(B) Department Quality Assurance Sampling

Plant Sampling All Quality Assurance samples are to be taken on a random basis from the available split Quality Control (QC) samples. ABC samples are to be taken at a minimum rate of one QA sample for each 5,000 tons of material shipped or at least one each week, whichever occurs more often.

QC/QA Comparison If the results of the Quality Assurance sample are not in agreement with the corresponding Quality Control sample, i.e. outside the limits of Table 1005-3, an investigation is to be made to determine the source of the difference. The investigation will include a review of the sampling and testing procedures and the testing equipment.

If the cause of the difference can be determined, it is to be noted on the Plant Quality Assurance Form. If the cause is determined to be improper sampling or testing procedures, the appropriate certified technician will be notified. If the problem continues, the technician's certification may be revoked. If the cause is determined to be in the Producer's testing equipment or handling of the material, the Producer is to take corrective action. If this problem continues, the Producer's approval to provide material to the Department may be revoked. If the cause is determined to be in the Department's' testing equipment, the Department will take corrective action.

If the investigation does not reveal the cause of the disparity, another QC/QA comparison will be made on the next sample taken in the presence of the Department. If the comparison is within the limits of Table 1005-3, the shipment of material may continue. If, however, the comparison is not within the limits of Table 1005-3, the shipment of material is to cease and further investigation will be performed.

(C) Department Roadway Assurance Sampling

For sampling and acceptance purposes, a lot will be 5,000 tons or a fraction thereof.

For each lot of aggregate placed on the road, 2 samples will be taken at random locations on the road prior to compaction. The first sample will be taken from the first 2,500 tons or first half of the lot; the second sample will be taken from the second 2,500 tons or second half of the lot. The gradation test results of these samples will be averaged. The LL and PI results will not be averaged. The LL, PI,

range, and average gradation results of these samples will be used to determine the acceptability of the lot.

LL/PI The material passing the No. 40 sieve shall not have a Liquid Limit in excess of 30 or a Plasticity Index in excess of 6. If any individual test result indicates values exceeding these, the lot will be rejected.

Range When the test results for the 2 samples used to determine the average test result for acceptance exceed the range established by Column D of Table 1010-1, the lot, at the option of the Contractor, may be corrected or judged to be nonuniform and acceptance will be made in accordance with Article 105-3 and an adjustment in contract unit price will be made as follows

The number of points shown in Column E of Table 1010-1 will be assigned to the lot involved on an accumulative basis for each percent that the range between the test results of the 2 samples exceeds those values given in Column D. Price adjustments will be made by reducing the contract unit price by 2 percent for each point assigned. Any lot having an assigned accumulative range total of more than 25 points will be rejected.

Gradation For the lot to be acceptable, the average test results shall meet the gradation requirements shown in Column C of Table 1010-1. When the average gradation test result falls outside the limits of Column C of Table 1010-1, the lot will be rejected.

Check Samples For lots that are rejected, the following steps are to be taken:

(1) Perform additional sampling of the 5000 tons of material in order to isolate the unacceptable material. The procedure for this additional sampling consists of dividing the 5000 tons of material into two 2500 ton sublots and taking 2 samples at random locations from each of these two sublots. The results of the 2 samples will be used to determine the acceptance of each of the sublots.

(2) When the test results for a sublot are within the limits above for Range, LL/PI, and Average Gradation, the sublot will be considered acceptable.

(3) When the test results for a sublot exceed any of the limits above for Range, LL/PI, and Average Gradation, and the sublot cannot be corrected by the addition of aggregate or when the average gradation or range of a corrected sublot exceeds any of the limits of Table 1010-1, Column B or D, or the LL or PI of either sample exceed the limits of Table 1010-1 Column B, the sublot will be rejected and shall be removed and replaced at no additional cost to the Department unless otherwise approved by the Engineer.

(4) When the test results for a sublot exceed any of the limits shown in 3 above and the test results indicate the material can be corrected by the addition of aggregate, the Engineer may allow the material to be corrected provided there is no additional cost to the Department for furnishing, adding, remixing, reshaping, and recompacting of the added material. The method of correcting

the sublot shall be approved both by the Area Roadway Engineer and the Soils Engineer.

(5) Two samples will be randomly taken from the corrected sublot. When the average gradation or range of a corrected sublot exceeds any of the limits of Table 1010-1, Column B or D, or the LL or PI of either sample exceed the limits of Table 1010-1 Column B, the material will be removed and replaced at no additional cost to the Department in accordance with the requirements of Article 520-6.

1010-3 SOIL TYPE BASE COURSE.

Soil type base course consists of one or more natural materials proportioned and blended on the road, and will be Type A, B, or C. Use the type specified in the Specifications.

Provide soil type base course free from vegetative matter and lumps or balls of clay meeting the requirements of Table 1010-3 for the applicable type.

Samples will be taken in accordance with Article 530-8.

TABLE 1010-3
ACCEPTANCE CRITERIA FOR
SOIL TYPE BASE COURSE

Sieve Size	Type A	Type B	Type C
	% Passing	% Passing	% Passing
2"	--	100%	--
1"	100%	70-100%	100%
1/2"	--	55-100%	--
No. 4	--	35-80%	--
No. 10	65-100%	25-65%	65-100%
No. 40	--	15-45%*	--
No. 200	--	5-25%*	--
Material Passing No. 10 Sieve (Soil Mortar)			
No. 40	40-75%	--	40-95%
No. 200	12-35%	--	12-35%
Material Passing No. 40 Sieve			
L. L.	0-25	0-25	0-25
P. I.	0-6	0-6	0-6

* The fraction passing the No. 200 sieve shall be less than 2/3 the fraction passing the No. 40 sieve.

1010-4 AGGREGATE FOR PLANT MIXED CEMENT TREATED BASE COURSE

(A) General

Aggregate for plant mixed cement treated base course is aggregate from an approved source participating in the Department's Aggregate Quality Control/Quality Assurance Program (Aggregate QC/QA Program) as described in Section 1006 which has been tested and approved in accordance with the requirements of this article and the applicable requirements of Article 1010-1, except as may be modified by this article. Sources of aggregate will not be approved unless the material has a percentage of wear of not greater than 65 percent.

Provide aggregates meeting the gradation requirements of Table 1010-4 for a sampling unit or lot as defined by Subarticle 1010-4(B).

(B) Quarry production

(1) Producer's Quality Control Sampling

Plant Sampling The lot size will be 2,000 tons of material, or a fraction thereof, shipped. The certified plant technician is to obtain a pair of Quality Control (QC) samples, labeled A and B, each weighing a minimum of 70 lbs. from each lot. Each sample is to be split into two halves, using procedures outlined in Exhibit C or the *Aggregate QC/QA Program Manual*. Each half is to be clearly identified.

The other half of the samples will be retained and made available to the Department. These retained samples will serve as the pool from which random Quality Assurance samples will be obtained by the Department. The Department's Quality Assurance testing is discussed in the *Aggregate QC/QA Program Manual*.

Rejections and Corrections If the Quality Control samples do not meet the gradation requirements of Column B, or the range requirements of Column D, or the LL and PI requirements of Column B of Table 1010-4 of the Specifications, the procedures are as follows:

When the test results for a lot exceed the gradation shown in Column B of Table 1010-4, the lot will be rejected and shall be removed and replaced by the Contractor at no cost to the Department or at the option of the Contractor, the lot may be corrected as described below.

Range When the test results for the 2 samples used to determine the average test result for acceptance exceed the range established by Column C of Table 1010-4, the lot, at the option of the Contractor, may be corrected or judged to be nonuniform and acceptance will be made in accordance with Article 105-3 and an adjustment in contract unit price will be made as follows:

The number of points shown in Column D of Table 1010-4 will be assigned to the lot involved on an accumulative basis for each percent that

the range between the test results of the 2 samples exceeds those values given in Column C. Price adjustments will be made by reducing the contract unit price by 2 percent for each point assigned. The unit price adjustment for nonuniform material will be in addition to any price adjustment determined necessary for average gradation.

LL/PI In addition to the gradation acceptance requirements listed in Table 1010-4, the material passing the No. 40 sieve shall not have a Liquid Limit in excess of 30 or a plasticity index in excess of 4. If any individual test result indicates values exceeding these, the lot will be rejected and shall be removed and replaced by the Contractor.

Total Points Any lot having an assigned accumulative gradation and range total of more than 25 points will be rejected and shall be removed and replaced by the Contractor at no cost to the Department or at the option of the Contractor, the lot may be corrected.

Roadway Correction When the Contractor chooses the option to correct the sublot, the Contractor will take 2 random Roadway Quality Control Samples from within the corrected sublot. When the average test results of the Contractor's two Roadway Samples fall within the gradation limits as shown in Column B of Table 1010-4, the range limits as shown in Column D of Table 1010-4, and the LL and PI meet the requirements of Column B of Table 1010-4, the corrected sublot will be acceptable for Quality Assurance Sampling by the Department.

The Contractor is only allowed to correct a QC lot on the roadway once.

(2) Department Quality Assurance Sampling

Plant Sampling Take all Quality Assurance samples on a random basis from the available split Quality Control (QC) samples. Take them at a minimum rate of one QA sample for each 5,000 tons of material shipped or at least one each week, whichever occurs more often.

QC/QA Comparison - If the results of the Quality Assurance sample are not in agreement with the corresponding Quality Control sample, i.e. outside the limits of Table 1005-3, an investigation is to be made to determine the source of the difference. The investigation will include a review of the sampling and testing procedures and the testing equipment.

If the cause of the difference can be determined, it is to be noted on the Plant Quality Assurance Form. If the cause is determined to be improper sampling or testing procedures, the appropriate certified technician will be notified. If the problem continues, the technician's certification may be revoked. If the cause is determined to be in the Producer's testing equipment or handling of the material the Producer is to take corrective action. If this problem continues, the Producer's approval to provide material to Department may be

revoked. If the cause is determined to be in the Department's testing equipment, the Department will take corrective action.

If the investigation does not reveal the cause of the disparity, another QC/QA comparison will be made on the next sample taken in the presence of the Department. If the comparison is within the limits of Table 1005-3, the shipment of material may continue. If, however, the comparison is not within the limits of Table 1005-3, the shipment of material is to cease and further investigation will be performed.

(3) Department Roadway Assurance Sampling

For sampling and acceptance purposes, a lot will be 5,000 tons or a fraction thereof.

For each lot of aggregate placed on the road, 2 samples will be taken at random from the pugmill belt or roadway prior to the cement being added. The first sample will be taken from the first 2,500 tons or first half of the lot; the second sample will be taken from the second 2,500 tons or second half of the lot. The gradation test results of these samples will be averaged. The LL and PI results will not be averaged. The LL, PI, range, and average gradation results of these samples will be used to determine the acceptability of the lot.

LL/PI The material passing the No. 40 sieve shall not have a Liquid Limit in excess of 30 or a Plasticity Index in excess of 4. If any individual test result indicates values exceeding these, the lot will be rejected.

Range When the test results for the 2 samples used to determine the average gradation test result for acceptance exceed the range established by Column C of Table 1010-4, the lot will be judged to be nonuniform and an adjustment in contract unit price will be made as follows:

The number of points shown in Column D of Table 1010-4 will be assigned to the lot involved on an accumulative basis for each percent that the range between the test results of the 2 samples exceeds those values given in Column C. Price adjustments will be made by reducing the contract unit price by 2 percent for each point assigned. Any lot having an assigned accumulative range total of more than 25 points will be rejected.

Check Samples of the material may be taken by the Engineer in accordance with the procedures listed below if cement has not yet been added.

Gradation For the lot to be acceptable, the average test results shall meet the gradation requirements shown in Column B of Table 1010-4. When the average gradation test result falls outside the limits of Column B of Table 1010-4, the lot will be rejected.

Check Samples For lots that are rejected, the following steps are to be taken if cement has not yet been added to the material:

(a) Perform additional sampling of the 5000 tons of material in order to isolate the unacceptable material. The procedure for this additional sampling consists of dividing the 5000 tons of material into two 2500 ton sublots and taking 2 samples at random locations from each of these two sublots. The results of the 2 samples will used to determine the acceptance of each of the sublots.

(b) When the test results for a sublot are within the limits above for Range, LL/PI, and Average Gradation, the sublot will be considered acceptable.

(c) When the test results for a sublot exceed any of the limits above for Range, LL/PI, and Average Gradation, and the sublot cannot be corrected by the addition of aggregate or when the average gradation or range of a corrected sublot exceeds any of the limits of Table 1010-4, Column B, or the LL or PI of either sample exceed the limits of Table 1010-4 Column B, the sublot will be rejected and shall be removed and replaced at no additional cost to the Department unless otherwise approved by the Engineer.

(d) When the test results for a sublot exceed any of the limits shown above and the test results indicate the material can be corrected by the addition of aggregate, the Engineer may allow the material to be corrected provided there is no additional cost to the Department for furnishing, adding, remixing, reshaping, and recompacting of the added material. The method of correcting the sublot shall be approved both by the Area Roadway Engineer and the Soils Engineer.

(e) Two samples will be randomly taken from the corrected sublot. When the average gradation or range of a corrected sublot exceeds any of the limits of Table 1010-4, Column B, or the LL or PI of either sample exceed the limits of Table 1010-4 Column B, the material will be removed and replaced at no additional cost to the Department in accordance with the requirements of Subarticle 520-6(B).

TABLE 1010-4
ACCEPTANCE CRITERIA FOR
AGGREGATE FOR PORTLAND CEMENT TREATED BASE COURSE

Column A Sieve	Column B	Column C Range	Column D Points
1 1/2"	100%	3	1
1"	80-100%	15	1
1/2"	58-83%	20	1
No. 4	38-60%	18	3
No. 10	28-50%	18	2
No. 40	15-33%	14	3
No. 200	6-13%	7	5

Material Passing No. 10 Sieve (Soil Mortar)			
No. 40	40-85%	35	2
No. 200	12-35%	20	2
Material Passing No. 40 Sieve			
L. L.	0-30	-	
P. I.	0-4	-	

SECTION 1012
AGGREGATE FOR ASPHALT PAVEMENTS AND SURFACE TREATMENTS

1012-1 AGGREGATES FOR ASPHALT PLANT MIXES

(A) General

Formulate the asphalt plant mix with coarse and fine aggregate that meets the requirements of Section 1005, except as noted herein. Size, uniformly grade, and combine the several aggregate fractions in such proportions that the resulting mixture meets the grading and physical requirements of these Specifications for the specified mix type. Materials that will not produce a mixture within the design criteria required by these Specifications will be rejected, unless otherwise approved.

The consensus property criteria in Table 1012-1 apply to the coarse aggregate or fine aggregate blend. Source property criteria apply to individual aggregate sources.

For all surface course mixes, except OGAFC, that are the top or final layer, limit the amount of coarse aggregate or fine aggregate produced from crystalline limestone, crystalline-dolomitic limestone, or marble to a maximum of 50% of the total amount of coarse aggregate or fine aggregate in the asphalt mixture. Do not use aggregates produced from crystalline limestone, crystalline-dolomitic limestone, or marble in the production of open-graded asphalt friction course.

(B) Coarse Aggregate

(1) General

Use coarse aggregate consisting of crushed stone, crushed gravel, a mixture of uncrushed gravel with either crushed stone or crushed gravel, or other inert material having similar characteristics. Provide coarse aggregate composed of clean, tough, durable fragments free from an excess of flat or elongated pieces, and free of organic matter and deleterious substances.

Use coarse aggregate from sources participating in the Department's Aggregate Quality Control/Quality Assurance (QC/QA) Program as described in Section 1006. A list of sources participating in the Department's QC/QA Program in North Carolina and adjoining states is available from the Department's Materials and Tests Unit in Raleigh.

(2) Gradation

Use standard size coarse aggregate meeting the requirements of Table 1005-1 and these Specifications unless otherwise approved.

(3) Coarse Aggregate Angularity (Fractured Faces)

Use coarse aggregate meeting the requirements of Table 1012-1 for course aggregate angularity (fractured faces) when tested in accordance with ASTM D 5821.

(4) Flat and Elongated Pieces

Use coarse aggregate meeting the requirements of Table 1012-1 for flat and elongated pieces when tested in accordance with ASTM D 4791 (Section 8.4) on the No. 4 sieve and larger with a 5:1 aspect ratio (maximum to minimum) for all pavement types, except there is no requirement for, Types S4.75A, SF9.5A and S 9.5B.

(5) Soundness

The maximum weighted average soundness loss of individual coarse aggregate sources when subjected to 5 cycles using sodium sulfate when tested in accordance with AASHTO T 104 is 15%.

TABLE 1012-1
AGGREGATE CONSENSUS PROPERTIES [a]

Mix Type	Course Aggregate Angularity[b]	Fine Aggregate Angularity % Minimum	Sand Equivalent % Minimum	Flat &Elongated 5 : 1 Ratio % Maximum
	ASTM D 5821	AASHTO T304 Method A	AASHTO T 176	ASTM D 4791 Section 8.4
S.4.75		40	40	
SF9.5A S 9.5 , B				
S 12.5 B	75 / -	40	40	10[c]
I 19.0 B B 25.0 B				
S 9.5 C				
S 12.5 C	95 / 90	45	45	10
I 19.0 C B 25.0 C B 37.5 C				
S 12.5 D	100 / 100	45	50	10
I 19.0 D				
OGAFC	100/100	NA	NA	NA

Notes [a]Requirements apply to the coarse aggregate blend and/or fine aggregate blend

[b] 95/90 denotes that 95% of the coarse aggregate has one fractured face and 90% has two or more fractured faces.

[c] Does not apply to Mix Types S 9.5A and S 9.5B.

(6) Toughness (Resistance to Abrasion)

The maximum allowable percentage of loss of each individual coarse aggregate source for all plant mix types except open-graded asphalt friction

course, when tested in accordance with AASHTO T 96 is 55%. The maximum percentage loss for aggregate used in OGAFC is 45%.

(7) Deleterious Materials

The maximum allowable percentage by weight of clay lumps and friable particles in individual aggregate sources when tested in accordance with AASHTO T 112 is 0.3%.

(C) Fine Aggregate

(1) General

Use fine aggregate that is consistently graded from coarse to fine and consists of natural sand, stone screenings, or a blend of natural sand and stone screenings. Use aggregate composed of rough surfaced and angular grains of quartz or other hard durable rock.

Use fine aggregate from sources participating in the Department's Aggregate Quality Control/Quality Assurance (QC/QA) Program as described in Section 1006 unless the fine aggregate is produced at a pit owned by the same owner as the asphalt plant where the material is used. A list of sources participating in the Department's QC/QA Program in North Carolina and adjoining states is available from the Department's Materials and Tests Unit in Raleigh.

Furnish sand from sources that have been approved. Do not use sources that have been contaminated by industrial waste. A sufficient number of samples of fine aggregate, but in no case less than three, will be taken to indicate any variation within any stockpile or source of supply.

Do not use fine aggregate containing sticks, roots, trash, visible lumps of clay, or other unsatisfactory material unless all undesirable material is removed to the satisfaction of the Engineer before the aggregate is used in the asphalt mixture.

Use natural sand that is non-plastic when tested in accordance with AASHTO T 90.

Natural sand that contains grains of questionable hardness will be subjected to 5 cycles of the soundness test. The weighted average loss shall be not more than 15 percent. The soundness test will be performed prior to establishing the mix design.

Produce stone screenings from stone that has a maximum percentage of wear of 55 percent when tested in accordance with AASHTO T 96 using test grading A.

(2) Gradation

Use stone screenings that are consistently graded with not more than 20 percent by weight passing the No. 200 sieve when tested by dry sieving in accordance with AASHTO T 27. Use natural sand that is consistently graded.

(3) Clay Content (Sand Equivalent)

Use a fine aggregate blend that has a minimum sand equivalent percentage as indicated in Table 1012-1 when tested in accordance with AASHTO T 176.

(4) Soundness

The maximum weighted average soundness loss of individual fine aggregate sources when subjected to 5 cycles using sodium sulfate when tested in accordance with AASHTO T 104 is 15%.

(5) Deleterious Materials

The maximum percentage by weight of clay lumps and friable particles in individual fine aggregate sources when tested in accordance with AASHTO T 112 is 0.3 %.

(6) Fine Aggregate Angularity

Use a fine aggregate blend that has a minimum fine aggregate angularity as indicated in Table 1012-1 when tested in accordance with AASHTO T 304 Method A.

(D) Mineral Filler

Use mineral filler consisting of limestone dust, dolomite dust, portland cement, or other inert mineral matter that conforms to the requirements of AASHTO M 17.

(E) Hydrated Lime Anti-strip Additive

Use hydrated lime conforming to the requirements of ASTM C 977. Add hydrated lime used for anti-strip purposes at a rate of not less than 1.0% by weight of the total dry aggregate.

(F) Reclaimed Asphalt Shingle Material (RAS)

Reclaimed asphalt shingles (RAS) are materials produced as a by-product of the manufacturing process for roofing shingles. Process the RAS by ambient grinding or granulating methods such that 100% will pass the 1/2" sieve when tested in accordance with AASHTO T-27. Perform the test on ground asphalt shingles prior to extraction of the asphalt. The use of discarded shingles or shingle scrap from re-roofing of commercial or residential buildings will not be allowed.

(G) Reclaimed Asphalt Pavement (RAP)

Use reclaimed asphalt pavement that meets all requirements specified for the following classifications

(1) Millings

Existing reclaimed asphalt pavement (RAP) that is removed from the original location by a milling process as specified in Section 607.

(2) Processed RAP

RAP that is processed in some form (possibly by crushing or use of a blending method) to produce a uniform gradation and binder content in the RAP prior to use in a recycled mix. Process RAP so that all materials will pass a 2" sieve prior to introduction into the plant mixer unit. Millings are considered processed provided it has a uniform gradation and binder content and does not contain oversize material.

(3) Unprocessed RAP

RAP in the form as removed from the original location that has not been processed for gradation and binder content uniformity. Different sources of unprocessed RAP may be stockpiled together provided it is generally free of contamination and will be processed prior to use in a recycled mix. RAP contamination in the form of excessive dirt, debris, clean stone, concrete, etc. will not be allowed. Incidental amounts of dirt, concrete, and clean stone will be acceptable.

(4) New Source RAP

New source RAP will be classified into 2 categories:

(a) Millings from a different source than that of the millings used for the recycled mix design process, and that are not to be further processed, will be considered a new source RAP.

(b) All processed RAP other than that included in the original stockpile sampled and approved for the recycled mix design will be considered a new source RAP.

After a stockpile of processed RAP or millings has been sampled and mix designs made from these samples, do not add new source RAP to the original stockpile without prior field testing to insure gradation and binder uniformity. New source RAP shall be sampled before blending with the existing stockpile.

Store new source RAP in a separate stockpile until the material can be sampled and tested for comparison with the original recycled mix design data. New source RAP may also be placed against the existing stockpile in a linear manner provided it is sampled for mix design conformity prior to its use in the recycled mix.

Field approval will be based on Table 1012-2 below and volumetric mix properties on the mix with the new source RAP included. Provided the Table 1012-2 tolerances are met, volumetric properties of the new mix will then be performed. If all volumetric mix properties meet the mix design criteria for that mix type, the new source RAP may continue to be used.

If the gradation, binder content, or any of the volumetric mix properties are not within the allowable tolerances, do not use the new source RAP unless approved by the Engineer. A decision to not use the stockpile, adjust the JMF, or redesign the mix will be made.

TABLE 1012-2
NEW SOURCE RAP GRADATION and BINDER TOLERANCES
(Apply Tolerances to Mix Design Data)

Mix Type	0-15% RAP			15^+-25 % RAP			25^+ % RAP		
Sieve	**Base**	**Inter.**	**Surf.**	**Base**	**Inter.**	**Surf.**	**Base**	**Inter.**	**Surf.**
P_b, %		± 0.7%			± 0.4%			± 0.3%	
1 1/2"	±10	-	-	±7	-	-	±5	-	-
3/4"	±10	±10	-	±7	±7	-	±5	±5	-
1/2"	-	±10	±6	-	±7	±3	-	±5	±2
3/8"	-	-	±8	-	-	±5	-	-	±4
No. 4	±10	-	±10	±7	-	±7	±5	-	±5
No. 8	±8	±8	±8	±5	±5	±5	±4	±4	±4
No. 16	±8	±8	±8	±5	±5	±5	±4	±4	±4
No. 30	±8	±8	±8	±5	±5	±5	±4	±4	±4
No. 50	-	-	±8	-	-	±5	-	-	±4
No. 200	±4	±4	±4	±2	±2	±2	±1.5	±1.5	±1.5

1012-2 AGGREGATES FOR ASPHALT SURFACE TREATMENT

(A) General

Use coarse aggregate consisting of crushed stone, crushed gravel, crushed slag, or other inert material having similar characteristics. Adequately wash coarse aggregate so that it is free from clay, loam, dust, and other adherent materials.

Adequately clean all fine aggregate so that it is free from sticks, roots, visible lumps of clay, or other unsatisfactory material prior to use.

(B) Gradation

Use standard size No. 5, No. 67, No. 78M, or Lightweight coarse aggregate for mat or seal coat as required by Table 660-1, unless otherwise required by the contract. Use aggregate meeting the applicable gradation requirements of Table 1012-3.

Remix aggregate that has become segregated until it meets the applicable gradation requirements.

TABLE 1012-3
AGGREGATE GRADATION, COARSE AGGREGATE, ASPHALT SURFACE TREATMENT

STD SIZE	PERCENTAGE OF TOTAL BY WEIGHT OF PASSING																REMARKS
	2"	1 1/2"	1"	3/4"	1/2"	3/8"	#4	#8	#10	#16	#30	#40	#50	#80	#100	#200	
5		100	90-100	20-55	0-10	0-5										0-*0.6	AST Mat coat, Sediment Control Stone
67			100	90-100		20-55	0-10	0-5								0-*0.6	AST Mat coat
78M				100	98-100	75-100	20-45	0-15								0-*0.6	Asphalt Plant Mix Pavement, AST Weep Hole Drains, Str. Concrete
LIGHT WEIGHT					100	80-100	5-40	0-20		0-10						0-2.5	AST

(C) Fractured Faces

Use coarse aggregate that contains at least 75 percent by weight of crushed pieces having 2 or more fractured faces, and at least 90 percent by weight of crushed pieces having 1 or more fractured faces on that portion retained on the No. 4 sieve.

(D) Soundness

The maximum weighted average loss of either coarse or fine aggregate when subjected to 5 cycles using sodium sulfate when tested in accordance with AASHTO T 104 is 15%.

(E) Toughness (Resistance to Abrasion)

The maximum percentage loss of course aggregate for asphalt surface treatment when tested in accordance with AASHTO T 96 is 55%.

(F) Blending of Aggregates

Blending of two or more aggregates will not be permitted regardless of the origin of the aggregates if any one of the aggregates fails to meet the requirements for soundness or resistance to abrasion.

(G) Weight of Slag

The minimum weight of crushed slag is 70 pounds per cubic foot as determined in accordance with AASHTO T 19.

1012-3 BLOTTING SAND

Blotting sand is fine aggregate consisting of natural sand, commercial sand, manufactured sand, coarse screenings, or other inert material having similar characteristics. The requirements of Subarticles 1012-2 (D) and 1012-2 (F) will be applicable to blotting sand. Adequately clean the fine aggregate so that it is free from sticks, roots, visible lumps of clay, or other unsatisfactory material prior to use.

1012-4 LIGHTWEIGHT AGGREGATE

Lightweight aggregates used in asphalt surface treatments shall be produced by the rotary kiln process and shall come from an approved Department source meeting applicable requirements of Section 1005 and 1006. The aggregate shall also meet the requirements of ASTM C330, Lightweight Aggregate for Structural Concrete (AASHTO M195), with the exception of Sections 3, 6, 8, and any other references to concrete samples or concrete strength.

TABLE 1012-4
Lightweight Physical Properties

Property	Specification (maximum)	Test Procedure
Sodium Sulfate Soundness	5%	AASHTO T19
Los Angeles Abrasion	45%	AASHTO T96 (B grading)
Percent Absorption	10%	AASHTO T19
Micro-Deval	18%	AASHTO TP58-02

SECTION 1014
AGGREGATE FOR PORTLAND CEMENT CONCRETE

1014-1 FINE AGGREGATE

(A) General

Use fine aggregate from sources participating in the Department's Aggregate Quality Control/Quality Assurance Program as described in Section 1006. A list of sources participating in the Department's Quality Control/Quality Assurance Program in North Carolina and adjoining states is available from the Department's Laboratory in Raleigh.

Use fine aggregate consisting of natural sand or manufactured sand having clean, durable, hard, uncoated particles, or other inert materials having similar characteristics. Produce manufactured sand from fractured stone material. Use fine aggregate free from dirt, wood, paper, burlap, and all other foreign material.

To permit excess water to drain and the moisture content to become uniform, stockpile the aggregates either at the producer's plant or at the batch plant site for at least 24 hours before use in the concrete. Build open stockpiles of fine aggregate at the batch plant on concrete surfaces. Do not add new material to the stockpile during the 24 hour period. When the aggregates have a low and uniform moisture content and the consistency of the concrete can be satisfactorily controlled without stockpiling the aggregates for 24 hours, the minimum stockpiling period may be reduced or waived entirely by the Engineer.

The Division of Highways' list of approved sources of fine aggregate shows the target fineness modulus of each aggregate as established by the producer. Do not use fine aggregate with a fineness modulus that varies more than 0.2 from the target value until the concrete mix proportions are adjusted.

(B) Soundness

When subjected to 5 cycles of the soundness test, the weighted average loss shall not be more than 15 percent.

(C) Deleterious Substances

The amount of deleterious substances shall not exceed the following:

Substance	Maximum Permissible Percentage
Clay Lumps and	2.0 by weight (Natural sand)
Friable Particles	1.0 by weight (Manufactured sand)

The percentage of deleterious substances will be determined in accordance with AASHTO T112.

(D) Organic Impurities

The color of each source of fine aggregate will be determined annually in accordance with AASHTO T21. Should the fine aggregate show a darker color than samples previously approved from the same source, withhold its use until tests have been made to determine the quality of the sand.

(E) Mortar Strength

Mortar made with the fine aggregate shall have a compressive strength at the age of 3 and 7 days using Type III portland cement, or 7 and 28 days using Type I or II portland cement, of not less than 95 percent of that developed by a comparison mortar. Make the comparison mortar with the same cement, graded Ottawa sand with a fineness modulus of 2.40 plus or minus 0.05, and the same water-cement ratio and consistency as the test mortar. Test the mortar strength in accordance with AASHTO T 106.

Fine aggregate that fails to meet the requirements of the preceding paragraph for mortar strength may be used with the approval of the Engineer, provided that when it is tested in concrete cylinders the compressive strength of the concrete at 14 days is equal to or greater than the strength of cylinders made with an identical mix using an acceptable sand.

(F) Gradation

Natural sand shall meet the gradation requirements for standard size No. 2S fine aggregate. Manufactured sand shall meet the gradation requirements for standard size No. 2MS fine aggregate.

(G) Blending Fine Aggregate

Blending fine aggregates to obtain the required gradation will be permitted if test results of each aggregate meet the durability requirements and test results of the combination indicate acceptable quality. Blend aggregates by weighing them separately at the time of batching or by other means acceptable to the Engineer.

When natural sand is blended with natural sand, the blend shall meet the gradation requirements for No. 2S fine aggregate. When manufactured sand is blended with natural sand or with manufactured sand, the blend shall meet the gradation requirements for No. 2MS fine aggregate and neither component can exceed the gradation limits on the No. 200 sieve shown in Table 1005-2.

(H) Siliceous Particle Content

Manufactured sand shall have a siliceous particle content of not less than 25 percent when used in concrete surfaces exposed to traffic. The siliceous particle content will be determined by NCDOT Chemical Procedure C-9. Copies of this test procedure are available upon request from the Materials and Tests Unit.

1014-2 COARSE AGGREGATE

(A) General

Use coarse aggregate from sources participating in the Department's Aggregate Quality Control/Quality Assurance Program as described in Section 1006. A list of these sources in North Carolina and adjoining states is available from the Materials and Tests Unit in Raleigh.

Use coarse aggregate that consists of crushed stone, crushed or uncrushed gravel, crushed air-cooled blast furnace slag, or other inert materials that have similar characteristics. Wash all coarse aggregate for portland cement concrete to remove clay, loam, dust, and similar adherent materials unless otherwise permitted by the Engineer in writing. Keep coarse aggregate free from dirt, wood, paper, burlap, and all other foreign material.

To permit excess water to drain and the moisture content to become uniform, stockpile the aggregates either at the producer's plant or at the batch plant site for at least 24 hours before use in the concrete. Build open stockpiles of coarse aggregate at the batch plant on concrete surfaces. Do not add new material to the stockpile during the 24 hour period. Where the aggregates have low and uniform moisture content and the consistency of the concrete can be satisfactorily controlled without stockpiling the aggregates for 24 hours, the minimum stockpiling period may be reduced or waived entirely by the Engineer.

Do not mix coarse aggregate from different sources or use it in alternate batches except where permitted by the Engineer in writing. Blending of coarse aggregates to obtain the required gradation will be permitted if the different sizes are from the same source. Blend coarse aggregates by weighing them separately at the time of batching or by other means acceptable to the Engineer.

(B) Soundness

When subjected to 5 cycles of the soundness test the weighted average loss shall not exceed 15 percent. For concrete with a 28 day design compressive strength greater than 6,000 psi, the loss shall not exceed 8%.

(C) Deleterious Substances

The amount of deleterious substances shall not exceed the following:

Substance	Maximum Permissible Percentage
Clay Lumps and Friable Particles	3.2 by weight

Determine the percentage of deleterious substances in accordance with AASHTO T112.

(D) Resistance to Abrasion

The percentage of wear of crushed stone or gravel shall not exceed 55 percent. For concrete with a 28 day design strength greater than 6,000 psi, the wear shall not exceed 40%.

(E) Aggregate Sizes

(1) General

Use standard size No. 57, No. 67, or No. 78M coarse aggregate in portland cement concrete unless otherwise indicated.

(2) Latex Modified Concrete

Use standard size No. 78M coarse aggregate in latex modified concrete.

(3) Prestressed and Precast Concrete

Use No. 67 or No. 78M coarse aggregate in prestressed and precast concrete.

(4) Use of More Than One Size

All concrete used in a single component of any structure shall be made with the same size aggregate.

(5) Portland Cement Concrete Pavement

Use standard size No. 57, No. 57M, No. 67, or #78M coarse aggregate in concrete for portland cement concrete pavement unless otherwise specified by the Engineer.

(6) Sand Lightweight Concrete Use the following gradation for the lightweight coarse aggregate:

Sieve Size	Passing Square Opening Sieves (Percent by Weight)
1”	100
3/4”	90 - 100
3/8”	10 - 50
No. 4	0 - 15

(F) Gradation

All coarse aggregate shall meet the gradation requirements for the standard size used.

SECTION 1016
SELECT MATERIAL

1016-1 DESCRIPTION

Select material is suitable material classified by gradation and performance characteristics as shown in this section. Use select material called for on the contract.

1016-2 USES

Select material may be specified for use in:

Subgrade	Slope and shoulder embankment
Backfill in undercut	Rock embankment in open water
Core material	Material placement over fabric
Foundation conditioning	Pipe backfill

With written approval and without additional compensation, a higher class of material may be substituted than stated in the contract.

1016-3 CLASSIFICATIONS

CLASS I

Class I Select Material is silty or clayey soil material meeting the requirements of AASHTO M145 for soil classification A-4. Soil materials which meet the requirements of AASHTO M145 for soil classification A-2, A-5, A-6 and A-7 are also acceptable provided such materials do not have a liquid limit (LL) greater than 50, nor a plasticity index (PI) of less than 7 or greater than 20.

CLASS II

Type 1 - Select Material is a fine aggregate material consisting of crushed stone screenings (washed or unwashed) meeting the following gradation:

Sieve	**% Passing**
3/8 in	100
#4	80 - 100
#10	65 - 95
#40	25 - 55
#200	0 – 20
LL	<= 30
PI	<= 6

Type 2 - Select Material is a granular soil material meeting the requirements of AASHTO M145 for soil classifications A-2-4 with a maximum PI of 6 and A-4 soil containing 45% maximum passing a No. 200 sieve and a maximum PI of 6.

When a type is not specified, either type may be used, but no additional compensation will be made.

CLASS III

Type 1 - Select Material is a natural or manufactured fine aggregate material meeting the gradation requirements of standard size 2S or 2MS in Table 1005-2 as described in Sections 1005 and 1006.

Type 2 - Select Material is a granular soil material meeting the requirements of AASHTO M145 for soil classification A-1 or A-3.

When a type is not specified, either type may be used, but no additional compensation will be made.

CLASS IV

Select Material is a coarse aggregate material meeting the gradation requirements of standard size ABC as described in Section1010.

CLASS V

Select Material is a coarse aggregate material meeting the gradation requirements of standard size 78M in Table 1005-1 as described in section 1005 and 1006.

CLASS VI

Select Material is a coarse aggregate material meeting the gradation requirements of standard size 57 in Table 1005-1 as described in section 1005 and 1006.

Class VII

Select Material is clean, unweathered durable, blasted rock material with the following gradation:

(A) At least 50% of the rock has a diameter of from 1 1/2 feet to 3 feet

(B) 40% of the rock ranges in size from 2" to 1 1/2 feet in diameter.

(C) Not more than 10% of the rock is less than 2" in diameter. (No rippable rock will be permitted)

SECTION 1018
BORROW MATERIAL

1018-1 GENERAL

Borrow excavation is approved material meeting the requirements for the particular embankments, backfill, or other use intended. Material that contains roots, root mats, stumps, or other unsatisfactory material will not be acceptable.

1018-2 APPROVAL OF BORROW SOURCE

The approval of borrow sources is subject to the requirements of Section 230.

Criteria for Acceptance of Borrow Material

(A) Statewide Criteria: (See exceptions in II)

Only natural earth materials may be used as borrow material. Any other materials are subject to rejection (See II-b).

Soil with P.I. of 25 or less ..... Acceptable

Soil with P.I. of 26 through 35 Acceptable, but not to be used in top 2 feet of embankment or backfill.

Soil with P.I. of more than 35..... Not Acceptable

(B) Exceptions to Statewide Criteria:

(1) Soils in the Coastal Plain (area described below) will be accepted in accordance with the following:

Soil with P.I. of 15 or less ..... Acceptable

Soil with P.I. of 16 through 20 ..... Acceptable, but not to be used in top 2 feet of embankment or backfill.

Soil with P.I. of more than 20 ..... Not Acceptable.

Division 1 ..... Entire Division except Northampton (West of I-95)

Division 2 ..... Entire Division

Division 3 ..... Entire Division

Division 4 ..... Edgecombe, Wayne, Johnston (East of US 301), Wilson (East of I-95), Nash (East of I-95), Halifax (East of I-95)

Division 6 ..... Bladen, Columbus, Robeson, Cumberland, Harnett (South of NC 27)

Division 8 ..... Scotland, Hoke, Moore (Southeast of US 15-501, NC 73, NC 211), Richmond (East of US 220 North and US 1 South)

Also applicable to the flood plains of the Roanoke, Tar, Neuse, Cape Fear, and Lumber Rivers and their tributaries that is outside the above described areas.

(2) Waste or by-products from industrial processes or mining operations are not acceptable except by specific, written approval.

(3) When tested, soils having a pH of less than 5.5 or an organic content more than 4.0% may be rejected.

(4) --- When material is to be utilized for placing embankments or backfilling of undercut areas that are excessively wet, the material shall consist of Select Material Class II, III or IV.

SECTION 1020
ASPHALT MATERIALS

1020-1 DELIVERY AND ACCEPTANCE OF ASPHALT MATERIALS

Asphalt materials are accepted at the source of shipment subject to the following conditions:

All asphalt transport tankers, including rail and truck tankers, shall have a sampling valve in accordance with Asphalt Institute Publication MS-18, Sampling Asphalt Products for Specification Compliance and ASTM D140, or a comparable device acceptable to the Engineer.

Each transport tanker delivering asphalt materials to the project or rail siding shall keep a running log showing the date, destination, and type and grade of material hauled on each trip. Print, stamp, or write in ink information appearing in the log and have available for examination upon request of the Engineer at any time.

Furnish with each shipment 2 copies of a delivery ticket. Have both copies accompany the shipment and deliver to the Engineer or his representative at the destination. The delivery ticket shall contain the following information:

Delivery ticket number,
date shipped,
state project or purchase order number,
NCDOT assigned batch number,
destination,
name of consignee,
trailer or car number,
supplier's storage tank or batch number,
quantity loaded in tons or gallons
specific gravity or pounds per gallon at 60°F
loading temperature,
net gallons at 60°F

When anti-strip additive is introduced into the asphalt binder, have the delivery ticket note the brand, grade, and percentage or quantity at which the additive was introduced.

The Contractor's asphalt materials supplier shall furnish to the Materials and Tests Unit a typical viscosity-temperature chart at the beginning of each calendar year and a new chart whenever a change in production results in a shift of 5°F or more.

Furnish a statement of certification from the supplier and a separate statement of certification from the transporter. Sign each certification by an authorized representative of the supplier or transporter. Stamp, write, or print these certifications on the delivery ticket, or attach to the delivery ticket.

Unless otherwise approved by the Engineer, the following form shall be used in the supplier's certification:

> This is to certify that this shipment of _____ gallons/liters or tons/metric tons of _____ grade asphalt including _____ gallons/liters of _____ anti-strip meet all requirements of NC Department of Transportation Specifications.
>
> Signed _____
>
> Authorized Representative of Supplier

When no anti-strip additive is included with the load, the supplier shall indicate zero (0) in the gallons field and "NA" in the anti-strip field on the above certification.

Unless otherwise approved by the Engineer, the following form shall be used in the transporter's certification:

> This is to certify that this transport tank was clean and free from contaminating materials when loaded. The material transported on the previous load in this tanker was _____.
>
> Signed_____
>
> Authorized Representative of Transporter

Failure to sign the certifications by either the supplier or transporter will be cause to withhold use of the material until a sample can be taken and tested, except where an alternative testing and invoicing procedure has been pre-approved by the Engineer.

The Engineer reserves the right to sample and test any shipment regardless of whether or not the above conditions have been met and to reject any material not meeting the requirements of the Specifications.

1020-2 ASPHALT BINDER

Use Performance Graded Asphalt Binder meeting the requirements of AASHTO M 320 Table 1. See Article 610-3 for the specified grades. Submit a Quality Control Plan for asphalt binder production in conformance with the requirements of AASHTO R 26 to the Materials and Tests Unit.

NCDOT Performance Graded Asphalt Binder Quality Control/Quality Assurance Program shall be implemented in accordance with Subsection 1020-10.

Polymer Modifiers for Asphalt Binder – Where modification of the asphalt binder is required to meet the specified grade, accomplish the modification using a Styrene Butadiene Styrene (SBS), Styrene Butadiene Rubber (SBR), Styrene Butadiene (SB) polymer or other modifier approved by the Engineer to modify asphalt to meet the grade specified prior to delivery to the asphalt plant. Other polymers shall be pre-approved and listed by the NCDOT Materials and Tests Unit. Air blown asphalt will not be permitted.

1020-3 PRIME COAT MATERIALS

Supply prime coat materials from pre-approved sources in accordance with Materials and Tests Unit Method A and listed by the Department Materials and Tests Unit. Verification samples taken at the point of application (destination) are subject to the following conditions:

(A) All prime coat materials shall be delivered to the project ready for use.

(B) Sampling will be made at the point of application. The Department reserves the right to sample all materials used for prime coat applications, either at the destination or at the point of origin, and to withhold acceptance of material until analysis of such samples have been made. When a material meets specification requirements, but has a history of unsatisfactory service performance, its use for construction or maintenance purposes may be restricted by the Department and such restriction will be noted on the list of approved products.

(C) Proposed materials for Prime Coat Applications that are not listed as approved will be investigated upon the request of the supplier or Contractor. The maximum Volatile Organic Compounds for the products (materials) on the approved list for prime coat applications shall not exceed 6.8 ounces per gallon of material or the current applicable regulatory limit. Submit a Material Safety Data Sheet (MSDS), as well as a two quart sample from three different batches of the same material to the Materials and Tests Unit for evaluation.

(D) The Sand Penetration results for a material used as a prime coat are:

Penetration Depth (millimeter)	12 minimum
Penetration Time (seconds)	90 maximum

Copies of the Sand Penetration Test procedure are available upon request from the Materials and Tests Unit.

(E) Materials used as a prime coat shall have a minimum rating of *Fair* on the No-Tracking Time Test. Copies of the No-Tracking Time Test procedures are available upon request from the Materials and Tests Unit.

(F) Materials used as a prime coat shall have a minimum rating of *Fair* on the Coating Ability and Water Resistance Test in Accordance with AASHTO T-59.

(G) For materials that will be stored longer than one day at the destination point (Contractors'/Division' tanks), submit to the Engineer a Certified Laboratory Report on the performance of the material for Storage Stability Test in accordance with AASHTO T-59.

(H) The diluted materials shall be tested for asphalt residue percent in accordance with AASHTO T-59, Section 55, Residue by Evaporation, and shall have a minimum asphalt residue percent of 15.

1020-4 SILICONE

Silicone Additives shall be pre-approved and listed by the NCDOT Materials and Tests Unit.

1020-5 BLANK

1020-6 EMULSIFIED ASPHALT, ANIONIC

Emulsified asphalt, except for Grade RS-1H, shall meet the requirements of AASHTO M140.

Emulsified asphalt, Grade RS-1H, shall meet the requirements of AASHTO M140 for Grade RS-1 except as follows:

The penetration of residue shall be a minimum of 50 and a maximum of 100.

Perform the testing of the asphalt in accordance with AASHTO T59 except as follows:

(A) The residue by evaporation will be performed using a hot plate in lieu of an oven.

(B) The determination of coating test, solubility of residue, and ash will be made when deemed necessary by the Engineer.

(C) Materials and Tests Method A-24, Test For Compatibility of Aggregate and Emulsified Asphalt, is used to determine the coating ability and water resistance using either crushed or uncrushed aggregate from a source selected by the Department.

1020-7 EMULSIFIED ASPHALT, CATIONIC

Cationic emulsified asphalt, except for Grade CRS-1H, shall meet the requirements of AASHTO M208. Cationic emulsified asphalt, Grade CRS-1H, shall meet the requirements of AASHTO M208 for Grade CRS-1 except as follows:

(A) The residue after distillation shall be a minimum of 55 percent.

(B) The penetration of residue shall be a minimum of 50 and a maximum of 100.

(C) Viscosity, Saybolt Furol at 77°F shall be a minimum of 20 and a maximum of 100.

Perform the testing of the asphalt in accordance with AASHTO T59 except as follows:

(A) Residue by evaporation will be performed using a hot plate in lieu of an oven with a maximum temperature of 400 degrees F however referee testing will be performed in accordance with the current ASTM or AASHTO Standard Test Methods for Cationic or Anionic Emulsified Asphalts.

(B) The determination of coating test, oil distillate, pH, solubility of residue, ash, and particle charge will be made when deemed necessary by the Engineer.

(C) Materials and Tests Method A-24, Test For Compatibility of Aggregate and Emulsified Asphalt, is used to determine the coating ability and water resistance using either crushed or uncrushed aggregate from a source selected by the Department.

All polymer modified cationic asphalt emulsion materials are subject to the requirements of Section 1020. The following exceptions apply to CRS-2P:

(A) The material shall contain Styrene Butadiene Rubber, Styrene Butadiene Styrene, or Styrene Butadiene.

(B) The viscosity at 122 degrees F shall be a minimum of 100 seconds and a maximum of 400 seconds.

(C) The sieve shall be a maximum of 0.15%.

(D) The 24 hour storage stability shall not exceed 1%.

(E) The residue by evaporation (oven evaporation) shall be a minimum of 65%.

(F) The elastic recovery (AASHTO T301) at 50 degrees F shall be a minimum of 55%.

(G) The ring and ball softening point (AASHTO T53) shall be a minimum of 110 degrees F.

(H) Polymer content may be analyzed if deemed necessary by the Engineer

1020-8 ANTI-STRIP ADDITIVE

Anti-strip additive may either be hydrated lime or a chemical additive or a combination of both. The additive shall be capable of preventing the separation of the asphalt binder from the aggregate and achieving the required tensile strength ratio (TSR) on the asphalt mix when tested in accordance with AASHTO T 283 as modified by Department.

When lime is used, it shall conform to the requirements of ASTM C 977.

When chemical additive is used, it shall be added to the asphalt binder prior to introduction into the mix. Do not use any chemical additive or particular concentration of chemical additive found to be harmful to the asphalt material or which causes the performance grading of the original asphalt binder to be out of specifications for the grade required.

1020-9 WATERPROOFING AND DAMPPROOFING MATERIALS

(A) Asphalt Primer

Asphalt primer shall meet the requirements of ASTM D-41.

(B) Asphalt Binder

Asphalt Binder shall meet the requirements of Article 1020-2, Grade PG 64-22.

(C) Tar

Tar shall meet the requirements of ASTM D490.

(D) Fabric

Woven cotton fabric for waterproofing shall meet the requirements of ASTM D-173.

1020-10 ASPHALT BINDER QUALITY CONTROL/QUALITY ASSURANCE

The Performance graded asphalt binder quality control quality assurance program is designed to give asphalt binder producers/suppliers (henceforth Producer designates Producer/Supplier) more responsibility for controlling the quality of material they produce and to utilize the quality control information they provide in the acceptance process by the Department. It requires asphalt binder producers to perform quality control sampling, testing and record keeping on materials they ship for use by the Department. Also, it documents that the Department will perform quality assurance sampling, testing and record keeping confirming the performance of the producers' control plan. In addition, the Producer is required to participate in Independent Assurance – comparative sample activities. The program is described in the *Performance Graded Asphalt Binder Quality Control/Quality Assurance Program Manual*.

The types of samples and the lot sizes required by the Producers and the Department are described in detail in the *Performance Graded Asphalt Binder Quality Control/Quality Assurance Program Manual.*

Acceptance or rejection of material will be based on the total program. Therefore, a comparison of the Quality Control, Quality Assurance, and other sample data may be used by the Department for acceptance or rejection of a lot of material.

Participation in this program does not relieve the producer of the responsibility of complying with all requirements of the *Department's Specifications*.

An electronic copy of the Program Manual may be obtained by accessing the Department's website or by contacting the Materials and Tests Unit Chemical Laboratory.

SECTION 1024
MATERIALS FOR PORTLAND CEMENT CONCRETE

1024-1 PORTLAND CEMENT

(A) General

Supply portland cement that meets the requirements of AASHTO M85 for Type I, II, or III except that the maximum fineness requirements of AASHTO M85 do not apply to cement used in precast concrete products. Throughout these Specifications Types I and II cement are referred to as regular portland cement and Type III as high early strength portland cement.

For concrete mix designs that contain an aggregate that has exhibited alkali-silica reactivity as documented by the Department, ensure that the alkali content of the cement, expressed as sodium-oxide equivalent, does not exceed 0.4%. However, cement with a higher alkali content not to exceed 1% is allowed if used with Class F fly ash, ground granulated blast furnace slag, microsilica, or other Department approved pozzolans in the amounts shown below. For all other mix designs, ensure that the alkali content of the cement, expressed as sodium oxide equivalent, does not exceed 0.6%; however, cement with a higher alkali content not to exceed 1% is allowed if used with Class F fly ash, ground granulated blast furnace, microsilica, or other Department approved pozzolans in the following amounts:

Class F Fly Ash	20% by weight of required cement content, with 1.2 lbs. Class F fly ash per lb. of cement replaced.
Ground Granulated	35% - 50% by weight of required cement content,
Blast Furnace Slag	with 1 lb. slag per lb. of cement replaced.
Microsilica	4-8% by weight of required cement content, with 1 lb. microsilica per lb. of cement replaced.

Type IP or IS blended cement is allowed for the cement-and-fly-ash or cement-and-slag portion of the mix.

Use white cement that meets the requirements of ASTM C150, except that the ferric oxide content is limited to 0.5 percent.

Use Type IP blended cement that meets the requirements of AASHTO M240, except that the pozzolanic content is limited to between 17 and 23 percent by weight and the constituents are interground.

Use Type IS blended cement that meets the requirements of AASHTO M240 except that the slag content is limited to between 35 and 50 percent by weight and the constituents are interground.

Do not use air-entraining portland cement.

Do not mix different types of cement, different brands of cement, or the same brand from different mills nor use them alternately except when authorized in writing by the Engineer.

Protect cement from contamination or damage during handling and storage. Do not use cement that is damaged, partially set, lumpy or caked.

(B) Basis of Acceptance, Cast-in-Place Construction

Furnish the Engineer 5 copies of a Type 5 Materials Certification in accordance with Article 106-3 from each supplier furnishing portland cement concrete. Ensure that the Certification states that the portland cement used on the project meets the requirements of Article 1024-1. Upon receipt of this certification the cement is useable prior to testing by the Department.

All cement is sampled and tested by the Department as it arrives on the project at such frequency as established by the Department.

(C) Basis of Acceptance, Precast Concrete Products

All cement is sampled and tested by the Department as it arrives at the precasting plant at such frequency as established by the Department.

1024-2 AGGREGATE

Provide aggregate that meets the requirements of Section 1014.

1024-3 ADMIXTURES

(A) Basis of Acceptance

Admixtures from an approved source are accepted without prior testing. Do not use admixtures that are not from an approved source until the admixture is approved by the Department.

(B) Approved Sources

An approved source is considered to be any manufacturer of admixtures who complies with the requirements of this subarticle.

The manufacturer is required to submit to the Materials and Tests Unit certified reports of tests that show that the admixture meets the applicable Specifications. Test shall be performed in a laboratory certified by the Cement and Concrete Reference Laboratory of the National Bureau of Standards.

Admixtures that contain chloride other than calcium chloride as provided herein are not permitted. The manufacturer is required to state in writing that no chloride was added during it's the manufacture of the admixture.

After an admixture is accepted, the manufacturer is required to submit to the Materials and Tests Unit on or prior to February 1 of each year a notarized certification that shows that the material is of the same composition as originally accepted and has not been changed or altered. If an admixture is changed or altered,

approval of the source in accordance with the above requirements is necessary before using the admixture.

The Engineer has the option to make any or all tests deemed desirable to verify the manufacturer's certification. Failure of the admixture in such tests is cause for discontinuation of its use. Failure of an admixture to perform satisfactorily under job conditions is cause for rejection of the source.

The Engineer maintains a list of approved sources on file.

(C) Air Entraining Agent

Provide air entraining agents that meet the requirements of AASHTO M154.

(D) Chemical Admixtures

(1) Set Retarding Admixtures

Use set retarding admixtures that meet the requirements of AASHTO M194 for Type D - water reducing and retarding admixtures.

(2) Water Reducing Admixtures

Use water reducing admixtures that meet the requirements of AASHTO M194 for Type A admixtures.

(3) Calcium Chloride

Provide calcium chloride that meets the requirements of AASHTO M144 for Type 2, concentrated flake, pellet, or other granular calcium chloride. The Engineer may waive the gradation requirement.

(4) High-Range Water Reducing Admixtures

Use high-range water reducing admixtures that meet the requirements of AASHTO M194 for Type F or Type G.

(5) Calcium Nitrite Corrosion Inhibitor

Use an approved calcium nitrite corrosion inhibitor that contains 30 % solids.

(E) OTHER ADMIXTURES

Admixtures not otherwise classified will be reviewed on a case-by-case basis by the Materials and Tests Unit.

1024-4 WATER

Ensure that water used to condition, wash, or as an integral part of materials does not contain any compound that will adversely impact the material or its long term performance. Use water with a pH in the range of 4.5 to 8.5, a chloride content no greater than 250 parts per million (ppm), a total solids content no greater than 500-ppm, and no dissolved organic matter.

Test all water from wells, streams, ponds and public water supplies in coastal North Carolina and all out of state locations unless the Engineer waives the testing requirement.

Water from a municipal water supply in a non-coastal area may be accepted by the Engineer without testing.

1024-5 FLY ASH

Provide fly ash that meets ASTM C618 for Class F or Class C, except ensure that the loss on ignition does not exceed 4%. Table 1A, Supplementary Optional Chemical Requirement of ASTM C618, applies to Class F fly ash. Use fly ash that also meets the optional physical requirements for uniformity shown in Table 2A of ASTM C618.

Do not use Class C fly ash in portland cement concrete if the alkali content of the cement exceeds 0.4%.

Furnish the Engineer 5 copies of a Type 4 Materials Certification from each fly ash supplier in accordance with Article 106-3. The laboratory that performs the tests included in the certification shall be regularly inspected by the Cement and Concrete Reference Laboratory (CCRL) for fly ash testing and shall authorize CCRL to submit a copy of the inspection reports directly to the Materials and Tests Unit of the Department. State in the certification that the fly ash used on the project meets the requirements of Article 1024-5. Upon receipt of this certification, use of the fly ash is allowed prior to testing by the Department.

All fly ash is sampled and tested by the Department as it arrives on the project at such frequency as established by the Department.

1024-6 GROUND GRANULATED BLAST FURNACE SLAG

Use blast furnace slag that meets the requirements of AASHTO M302, Grade 100.

Furnish the Engineer 5 copies of a Type 5 Certification from each fly ash supplier in accordance with Article 106-3. State in the certification that the blast furnace slag used in the concrete meets the requirements of Article 1024-6. Upon receipt of this Certification, use of the slag is allowed prior to testing by the Department. All slag is sampled and tested by the Department as it arrives on the project at such frequency as established by the Department.

1024-7 SILICA FUME

Provide silica fume (microsilica) that meets the requirements of Tables 1, 2, and 3 of ASTM C 1240. Furnish the Engineer 5 copies of a Type 4 Materials Certification from each silica fume supplier in accordance with Article 106-3. State in the certification that the silica fume used on the project meets the requirements of Article 1024-7. Upon receipt of this certification, use of the silica fume is allowed prior to testing by the Department. All silica fume is sampled and tested by the Department as it arrives on the project at such frequency as established by the Department.

SECTION 1026
CURING AGENTS FOR CONCRETE

1026-1 GENERAL

All curing agents shall be free from impurities that may be detrimental to the concrete. Do not use curing agent until the applicable tests have been performed and the Engineer has approved the curing agent.

1026-2 LIQUID MEMBRANE CURING COMPOUNDS

(A) General

Liquid membrane curing compounds shall meet the requirements of AASHTO M148, except that when tested in the water retention test described in AASHTO T155 the curing compound shall restrict the loss of water in the test specimen at the time of application of the compound to not more than 0.007 ounces per square inch.

The curing compound shall be Type 2, white pigmented, except that where clear type is required for a particular application, the curing compound shall be Type 1D, clear or translucent with fugitive dye.

Deliver curing compound in the manufacturer's original clean, sealed containers. Legibly mark each container with the name of the manufacturer, the name of the compound, the type of compound, the manufacturer's batch number, the date of manufacture, and the manufacturer's recommended shelf life.

Do not use curing compound that has been in storage for more than one year from the date of manufacture or more than the manufacturer's recommended shelf life, whichever is less.

(B) Test Procedures:

Curing compound will be tested in accordance with the test methods described or referred to in AASHTO M148 except as follows:

The size of molds for making test specimens will be approximately 5 1/2" in diameter by approximately 1" deep, or any other size selected by the Engineer.

1026-3 POLYETHYLENE FILM.

Polyethylene film shall meet the requirements of AASHTO M171 for white opaque polyethylene film, except that when tested for moisture retention efficiency the loss shall not be more than 0.007 ounces per square inch of surface area.

1026-4 WATER

All water used for curing concrete shall meet the requirement of Article 1024-4.

1026-5 BURLAP

Burlap shall meet the requirements of AASHTO M182. Any class of burlap will be acceptable.

Use new burlap or burlap that has been used for no purpose other than curing concrete. New burlap shall be free from starch, filler, or other substances added during manufacture, or shall be washed to remove such substances before use.

SECTION 1028
JOINT MATERIALS

1028-1 JOINT FILLER

Provide a nonbituminous type joint filler that meets AASHTO M153 for Type I, II, or III; or be a bituminous type that meets AASHTO M213. Furnish a Type 3 Manufacturer's Certification with each lot of the joint material supplied to each project.

1028-2 HOT APPLIED JOINT SEALER

Provide a hot applied joint sealer that conforms to ASTM D 6690. Furnish a Type 3 Manufacturer's Certification for each lot of the joint sealer supplied to each project.

1028-3 BLANK

1028-4 LOW MODULUS SILICONE SEALANT

Provide a cold applied, single component, chemically curing low modulus silicone sealant that meets ASTM D 5893 and this Specification. Acid cure sealants are not acceptable for use on portland cement concrete. Bond breakers shall meet the requirements of Article 1028-5.

(A) Silicone Sealant Types

Type NS – A non-sag silicone for use in sealing horizontal and vertical joints in portland cement concrete pavements and bridges. Tooling is required.

Type SL – A self-leveling silicone used to seal horizontal joints in portland cement concrete pavements and bridges. Tooling is not normally required.

(B) Requirements

Silicone sealant shall meet the following requirements in addition to ASTM D 5893:

TEST	REQUIREMENT
Peel (ASTM D 903 - bonded on concrete block)	Minimum of 20 lbs./in. of width with at least 75% cohesive failure.
Movement Capability and Adhesion (ASTM C 719)	No adhesive or cohesive failure after 10 cycles of test movements of +100% (extension) and –50% (compression)

Furnish a Type 3 Manufacturer's Certification for each lot of joint sealer material supplied to each project. Deliver each lot of sealant in containers plainly marked with the manufacturer's name or trademark, lot number, and date of manufacture.

1028-5 BOND BREAKER

Install silicone sealant over a bond breaker to prevent the sealant from bonding to the bottom of the joint. Use bond breakers that do not stain or adhere to the sealant and are chemically inert and resistant to oils.

Type L – A closed-cell expanded polyethylene foam backer rod. Use this backer rod in roadway and bridge joints and with Type NS silicone only.

Type M – A closed-cell polyolefin foam backer rod which has a closed-cell skin over an open cell core. Use this backer rod in roadway and bridge joints with both silicone sealant types.

Both types of backer rod shall meet the following requirements:

Density (ASTM D 1622) ..... 2.0 lb/ft^3 minimum

Tensile Strength (ASTM D 1623) ..... 25 psi minimum

Water absorption (ASTM C 509) ..... 0.5% by volume maximum

Type N – Provide bond breaking tape made from extruded polyethylene that has a pressure sensitive adhesive on one side. Bond breaking tape may be used with both types of silicone but is suitable for bridge joints only.

Bond breaking tapes shall be a minimum of 0.005" in thickness.

Furnish a Type 3 Manufacturer's Certification for each lot of bond breaker material supplied to each project.

SECTION 1032

CULVERT PIPE

1032-1 CORRUGATED METAL CULVERT PIPE

Use corrugated metal culvert pipe from sources meeting requirements of the Department's Brand Certification Program for metal culvert pipe. A list of these sources is available from the Materials and Test Unit's Central Laboratory. The Department will remove a manufacturer of metal culvert pipe from this program in the event that the monitoring efforts indicated that non-specification material is being provided or test procedures are not being followed.

The following types of steel and aluminum alloy pipe and all associated accessories may be accepted under this program.

(A) Corrugated metal culvert pipe, pipe arches and underdrain.

(B) Coated, paved and lined corrugated metal culvert pipe and pipe arches.

(C) Corrugated metal end sections, coupling band, and other accessories and hardware.

(D) Coated, paved, and lined metal end sections, coupling bands and accessories.

(E) Corrugated aluminum alloy structural plate pipe and pipe arches.

(F) Welded steel pipe

1032-2 CORRUGATED ALUMINUM ALLOY CULVERT PIPE

(A) Corrugated Aluminum Alloy Culvert Pipe

Corrugated aluminum alloy culvert pipe shall meet the requirements of AASHTO M196 except that Type IA pipe will not be permitted.

When elongated pipe is called for by the contract, use pipe that is shop formed to provide for a 5 percent vertical elongation.

Coupling bands with projections may be used for circumferential pipe, helical pipe, or a combination of both.

(B) Corrugated Aluminum Alloy Pipe Tees and Elbows

Corrugated aluminum alloy pipe tees and elbows shall meet all applicable requirements of AASHTO M196.

(C) Acceptance

Acceptance of corrugated aluminum alloy culvert pipe, and its accessories will be based on, but not limited to, visual inspections, classification requirements, check samples taken from material delivered to the project, and conformance to the annual Brand Registration.

Culvert pipe materials not meeting the above requirements will be rejected, unless written approval is obtained from the State Materials Engineer.

1032-3 CORRUGATED STEEL CULVERT PIPE

(A) Corrugated Steel Culvert Pipe and Pipe Arch

Corrugated steel culvert pipe and pipe arch shall meet the requirements of AASHTO M36 with the following exceptions:

(1) Coupling Bands

(a) Use corrugated coupling bands except as may be otherwise provided below.

(b) A hugger type corrugated band having one annular corrugation at each outside edge of the band will be acceptable.

(c) Coupling bands with projections may be used where it is necessary to join new pipe to existing pipe having helical corrugations at the joint locations. Use an approved sealer with this type of coupling band.

(d) Fasten coupling bands on the ends with a minimum of two 1/2" bolts.

(e) Annular corrugated bands shall have a minimum width of 10 1/2" where 2-2/3" by 1/2" corrugations are used.

(2) Corrugations

Where 1/4" deep corrugations are permitted by AASHTO M36, the maximum pitch of the corrugations shall be 1 7/8".

Where 3" x 1" corrugations are required, the Contractor will also be permitted to use 5" x 1" corrugations.

Pipe with helical corrugations shall have rerolled ends with a minimum of 2 annual corrugations at each end.

(3) Elongated Pipe

When elongated pipe is called for by the contract, use pipe that is shop formed to provide for a 5 percent vertical elongation.

(4) Lifting Straps

The pipe may be furnished either with or without lifting straps for handling. Attach the lifting straps by bolting or by welding. Bolt holes for attaching the straps shall be a smooth hole that is either punched or drilled. No burning of holes will be permitted. Design the lifting straps so that the holes can be plugged to prevent infiltration of backfill material.

Design the placement of lifting straps so as to ensure the pipe is equally supported along its axis.

(5) Coating Repair

Repair of galvanizing shall be in accordance with Section 1076-6.

(6) Type IA Pipe

Type IA pipe will not be permitted.

(7) Aluminized Pipe

Aluminized pipe may be used in lieu of galvanized pipe. Aluminized pipe shall meet all requirements of Subarticle 1032-3(A) except that the pipe and coupling bands shall be fabricated from aluminum coated steel sheet meeting the requirements of AASHTO M274.

(8) Marking Requirements

Pipe sections and special attachments for pipe 60" or larger diameter pipe shall be alphanumerically match-marked at the plant site before shipping. There may be additional markings as required by the Department's Brand Certification Program.

(B) Prefabricated Corrugated Steel Pipe End Sections

Corrugated steel end sections shall be in accordance with the details shown on the plans, and meet all applicable requirements of Subarticle 1032-3(A). Repair end sections on which the spelter coating has been bruised or broken either in the shop or in shipping in accordance with AASHTO M36.

(C) Corrugated Steel Pipe Tees and Elbows

Corrugated steel tees and elbows shall meet all applicable requirements of Subarticle 1032-3(A).

(D) Corrugated Steel Eccentric Reducers

Corrugated steel eccentric reducers shall meet all applicable requirements of Subarticle 1032-3(A), and the additional requirements shown below.

Construct the eccentric reducer so that the invert or flow line from the large pipe through the reducer and into the small pipe is a continuous straight line.

Make the reducer from the same thickness corrugated metals as the large diameter pipe. The reducing section may be riveted or welded.

(E) Acceptance

Acceptance of corrugated steel culvert pipe, and its accessories will be based on, but not limited to, visual inspections, classification requirements, check samples taken from material delivered to the project, and conformance to the annual Brand Registration.

Culvert pipe materials not meeting the above requirements will be rejected, unless written approval is obtained from the State Materials Engineer.

The reducing section shall reduce in diameter no more than 3" in 24" of length. Rivet or weld a 24" long constant diameter stub to each end of the reducing section to form the complete reducer.

Have the completed reducer show careful, finished workmanship in all particulars. Repair reducers on which the spelter coating has been bruised or broken either in the shop or in shipping in accordance with AASHTO M36. Reducers that show defective workmanship will be rejected. The following defects are considered to be evidence of poor workmanship, and the presence of any of them in any individual reducer will constitute sufficient cause for rejection:

(1) Not meeting required dimensions.
(2) Not of the specified shape.
(3) Uneven laps.
(4) Ragged or diagonal sheared edges
(5) Loose, unevenly lined or spaced rivets.
(6) Poorly formed rivet heads.
(7) Lack of rigidity.
(8) Dents or bends in the metal itself.
(9) Uneven welds.
(10) Gaps in welds

1032-4 COATED, PAVED, AND LINED CORRUGATED STEEL CULVERT PIPE

(A) Bituminous Coated Corrugated Steel Culvert Pipe and Pipe Arch

(1) Type A -- Fully Bituminous Coated

The pipe and pipe arch shall meet the requirements of Subarticle 1032-3(A) and be bituminous coated in accordance with the requirements of AASHTO M190 for Type A pipe. Do not coat coupling bands.

(2) Type B -- Half Bituminous Coated and Partially Paved

The pipe and pipe arch shall meet the requirements of Subarticle 1032-3(A) and be half bituminous coated and partially paved in accordance with the requirements of AASHTO M190 for Type B pipe. Do not coat coupling bands.

(3) Type C -- Fully Bituminous Coated and Partially Paved

The pipe and pipe arch shall meet the requirements of Subarticle 1032-3(A) and be fully bituminous coated and partially paved in accordance with the requirements of AASHTO M190 for Type C pipe. Do not coat coupling bands.

(4) Type D -- Fully Bituminous Coated and Fully Paved

The pipe and pipe arch shall be fully bituminous coated and fully paved as provided for Type C except that the pavement shall extend for the full circumference of the inside of the pipe. The inside diameter after paving shall not be less than 98 percent of the nominal diameter of the pipe. Do not coat coupling bands.

(B) Prefabricated Bituminous Coated Corrugated Steel Pipe End Sections

Bituminous coated corrugated steel end sections shall be in accordance with the details shown on the plans, and meet all applicable requirements of Subarticle 1032-4(A). Repair end sections on which the spelter coating has been bruised or broken either in the shop or in shipping in accordance with AASHTO M36. The pipe connector section shall be bituminous coated to match the adjacent pipe. Bituminous coating will not be required on the skirt section.

(C) Bituminous Coated Corrugated Steel Pipe Tees and Elbows

Bituminous coated corrugated steel tees and elbows shall meet all applicable requirements of Subarticle 1032-4(A).

(D) Bituminous Coated Corrugated Steel Eccentric Reducers

Bituminous coated corrugated steel eccentric reducers shall meet all applicable requirements of Subarticle 1032-3(D) and be bituminous coated as called for in Subarticle 1032-4(A).

(E) Optional Coatings for Bituminous Coated Pipe or Pipe Arch

A polymeric coating meeting the requirements of AASHTO M246 for Type B coating will be acceptable in lieu of bituminous coating wherever Type A fully bituminous coated corrugated steel culvert pipe or pipe arch is called for by the contract.

Pipe meeting the applicable requirements of Subarticle 1032-3(A) for aluminized pipe may be substituted for bituminous coated galvanized steel culvert pipe as provided in paragraphs 1 through 5 below, except that paragraphs 1, 2, and 3 will not apply in the counties of Beaufort, Bertie, Bladen, Brunswick, Camden, Carteret, Chowan, Columbus, Craven, Currituck, Dare, Gates, Hertford, Hyde, Jones, Martin, New Hanover, Onslow, Pamlico, Pasquotank, Pender, Perquimans, Tyrrell, and Washington.

(1) In lieu of Type A, Fully Bituminous Coated galvanized pipe, aluminized pipe without a bituminous coating, may be used.

(2) In lieu of Type B, Half Bituminous Coated and Partially Paved galvanized pipe, Type B aluminized pipe may be used. Type B aluminized pipe is aluminized pipe which has been half bituminous coated and partially paved as required by Subarticle 1032-4(A)(2). Type B: In lieu of Type B, Half Bituminous coated and Partially Paved galvanized pipe, aluminized pipe or polymeric coated pipe without bituminous coating and paving may be used.

(3) In lieu of Type C, Fully Bituminous Coated and Partially Paved galvanized pipe, Type B aluminized pipe may be used as Type C: In lieu of Type C, Fully Bituminous Coated and Partially Paved galvanized pipe, aluminized pipe or poylmeric coated pipe without a bituminous coating and paving may be used.

(4) In lieu of Type D, Fully Bituminous Coated and Fully Paved galvanized pipe, Type D aluminized pipe may be used. Type D aluminized pipe is aluminized pipe which has been fully bituminous coated and fully paved as required by Subarticle 1032-4(A)(4).

(5) The above provisions pertaining to the substitution of aluminized pipe for galvanized pipe will also apply to the substitution of aluminized pipe arch, end sections, tees, elbows, and eccentric reducers for galvanized pipe arch, end sections, tees, elbows, and eccentric reducers.

(F) Concrete Lined Corrugated Steel Culvert Pipe

Concrete lined corrugated steel culvert pipe, tees, and elbows shall be fully concrete lined for the full circumference of the inside of the pipe and meet the requirements of ASTM A849 for Type C-3 pipe. The inside diameter after lining shall not be less

than 98% of the nominal diameter of the pipe. The pipe, tees, and elbows before coating shall meet the requirements of Article 1032-3.

(G) Acceptance

Acceptance of coated, paved, and lined corrugated steel culvert pipe, and its accessories will be based on, but not limited to, visual inspections, classification requirements, check samples taken from material delivered to the project, and conformance to the annual Brand Registration.

Culvert pipe materials not meeting the above requirements will be rejected, unless written approval is obtained from the State Materials Engineer.

1032-5 CORRUGATED STEEL STRUCTURAL PLATE PIPE AND PIPE ARCH

The plate and fasteners for corrugated steel structural plate pipe and pipe arch shall meet the requirements of AASHTO M167.

When elongated pipe is called for by the contract, shop form the pipe to provide for a 5 percent elongation.

Unless otherwise required by the contract, place bolt holes along those edges of the plates that form longitudinal seams in the finished structure in 2 rows spaced 2" apart. Space the bolt holes a maximum of 6" apart.

Space bolt holes along those edges of the plates that form circumferential seams in the finished structure a maximum of 12" apart.

The minimum distance from the center of any bolt hole to the edge of the plate shall not be less than 1 3/4 times the diameter of the bolt. The diameter of bolt holes in longitudinal seams, excepting those at plate corners, shall not exceed the bolt diameter by more than 1/8". The diameter of holes in circumferential seams, including those at plate corners, shall not exceed the bolt diameter by more than 1/2" and the average of the diameter on the major and minor axes shall not exceed the bolt diameter by more than 1/4".

Cut plates for forming skewed or sloped ends to give the required angle of skew or slope. Burned edges shall be free from oxide and burrs and present a workmanlike finish. Repair damaged spelter coating around cut or burned edges as required by AASHTO M36.

Furnish an erection drawing for each installation. Mark each plate as necessary to insure proper placement in the structure.

Acceptance

Acceptance of corrugated steel structural plate pipe and pipe arches, and its accessories will be based on, but not limited to, visual inspections, classification requirements, check samples taken from material delivered to the project, and conformance to the annual Brand Registration. Culvert pipe materials not meeting the above requirements will be rejected unless written approval is obtained from the State Materials Engineer.

1032-6 CORRUGATED ALUMINUM ALLOY STRUCTURAL PLATE PIPE AND PIPE ARCH

The plate and fasteners for corrugated aluminum alloy structural plate pipe and pipe arch shall meet the requirements of AASHTO M219.

When elongated pipe is called for by the contract, shop form the pipe to provide for a 5 percent elongation.

Unless otherwise required by the contract, bolt holes along the plate edges that will form longitudinal seams in the finished structure shall be in 2 rows 1 3/4" apart and located in the valley end in the crest of each corrugation.

The minimum distance from the center of bolt holes to edge of plates shall not be less than 1 3/4 times the bolt diameter. Space bolt holes along those edges of the plates that form circumferential seams in the finished structure a maximum of 10" apart.

The diameter of bolt holes in longitudinal seams, excepting those at plate corners, shall not exceed the bolt diameter by more than 1/8". The diameter of holes in circumferential seams, including those at plate corners, shall not exceed the bolt diameter by more than 1/2" and the average of the diameters on the major and minor axes shall not exceed the bolt diameter by more than 1/4".

Accurately cut plates for forming skewed or beveled ends of structures to form the required final shape. Plates shall be saw cut, not burned, to present a competent finish free from notches or gouges.

Furnish an erection drawing for each installation. Mark each plate as necessary to insure proper placement in the structure.

Acceptance

Acceptance of corrugated aluminum alloy structural plate pipe and pipe arches, and its accessories will be based on, but not limited to, visual inspections, classification requirements, check samples taken from material delivered to the project, and conformance to the annual Brand Registration.

Culvert pipe materials not meeting the above requirements will be rejected unless written approval is obtained from the State Materials Engineer.

1032-7 VITRIFIED CLAY CULVERT PIPE

Vitrified clay culvert pipe shall meet the requirements of AASHTO M65 for extra-strength clay pipe.

When vitrified clay pipe sections have been inspected and accepted they will be stamped with the Department seal of approval. Do not use any pipe section that does not have this seal of approval.

Joint material shall meet the requirements of Subarticle 1028-8.

1032-8 WELDED STEEL PIPE

(A) Welded steel pipe shall meet the requirements of ASTM A139 for the grade of pipe called for on the plans.

(B) Acceptance

Acceptance of welded steel culvert pipe, and its accessories will be based on, but not limited to, visual inspections, classification requirements, check samples taken from material delivered to the project, and conformance to the annual Brand Registration.

Culvert pipe materials not meeting the above requirements will be rejected, unless written approval is obtained from the State Materials Engineer.

1032-9 CONCRETE CULVERT PIPE

(A) General

Use concrete pipe from sources participating in the Department's Concrete Pipe Quality Control/Quality Assurance Program. A list of participating sources is available from the Materials and Tests Unit's Central Laboratory**.** The Department will remove a manufacturer of concrete pipe from this program in the event that the monitoring efforts indicated that non-specification material is being provided or testings procedures are not being followed.

(B) Plain Concrete Culvert Pipe

Plain concrete culvert pipe shall meet all applicable requirements of AASHTO M170 except as follows:

(1) Do not reinforce it.

(2) The maximum weighted average loss for both coarse and fine aggregates is 15% when subjected to 5 cycles of the soundness test.

(3) The maximum percentage of wear for coarse aggregates is 55%.

Plain concrete culvert pipe shall meet the minimum requirements for Class II Wall A pipe except that the D-load to produce the ultimate load shall be 1,000 pounds.

(C) Reinforced Concrete Culvert Pipe

Reinforced concrete culvert pipe shall meet the requirements of AASHTO M170 for the class of pipe called for on the plans except as follows:

(1) The permissible wall thickness outside of the joint configuration shall not be more than that shown in the design by more than 5% or 3/16", whichever is greater.

(2) The maximum weighted average loss for both fine and coarse aggregates shall be 15% when subjected to 5 cycles of the soundness test.

(3) The maximum percentage of wear for coarse aggregates is 55%.

The design wall thickness shall be either the wall thickness shown in AASHTO M170 for the applicable class and wall or the wall thickness shown in a modified design that has been approved by the Engineer. A wall thickness greater than permitted by the above tolerance will be cause for rejection of the pipe. The circumferential steel in single cage pipe shall not be more than 3" from either end of the pipe section excluding the tongue and groove. On double cage pipe, extend one cage into the tongue or groove. Place the other cage so that a circumferential wire shall be not less than 2" from the other end of the barrel of the pipe.

(D) Precast Concrete Pipe End Sections

Precast concrete pipe end sections shall meet all applicable requirements of AASHTO M170 and Section 1077 except those pertaining to design.

Design concrete pipe end sections in accordance with the plans, or with plans prepared by the manufacturer which have been approved by the Engineer. Reinforce all concrete pipe end sections. Use air entrained concrete in pipe end sections, which attains a strength of 3500 psi when tested in accordance with AASHTO T22.

(E) Concrete Pipe Tees and Elbows

Concrete pipe tees and elbows shall meet all applicable requirements of AASHTO M170 for the class of pipe tee or elbow called for on the plans.

(F) Marking:

Clearly etchmark the following information on the outside of each section of pipe, pipe end section, tee, and elbow:

Pipe class and type of wall if reinforced

The date of manufacture(3)Name or trademark of the manufacturer

Clearly stamp, stencil, sticker or paint the following information on each section of pipe, pipe end section, tee and elbow

The State assigned plant number

The inside diameter of the pipe product

The year of manufacture

This marking shall be in the following format: State plant number - diameter - year. (CP99-24-06)

When concrete pipe, pipe end sections, tees, and elbows have been inspected and accepted they will be stamped with the Department seal of approval. Do not use pipe sections, pipe end sections, tees, or elbows which do not have this seal of approval. Failure of as much as 20 percent of any lot of pipe due to cracks, fractures, variation in alignment, or other manufacturing defects will be cause for the rejection of the entire lot. The lots shall be as designated by the manufacturer prior to inspection. Individual lengths of pipe within the lot which were not specifically rejected but

which are considered acceptable by the manufacturer may be removed from the rejected lot and resubmitted for inspection as a separate lot.

(G) Joint Materials

Cement shall meet the requirements of Article 1024-1. Sand shall meet the requirements of Article 1014-1 for fine aggregate or Article 1040-6 for mortar sand. Hydrated lime shall meet the requirements of Article 1040-5.

Flexible plastic joint material shall meet the requirements of AASHTO M198 for Type B flexible plastic gaskets, except as follows:

(1) The flash point, C.O.C. shall be a minimum of 325°F.

(2) The fire point, C.O.C. shall be a minimum of 350°F

1032-10 CORRUGATED POLYETHYLENE CULVERT PIPE

(A) General

Use corrugated polyethylene pipe from sources participating in the Department's HDPE Pipe Quality Control/Quality (QC/QA) Assurance Program. A list of participating sources is available from the Materials and Tests Unit's Central Laboratory. The Department will remove a manufacturer of polyethylene pipe from this program in the event that the monitoring efforts indicated that non-specification material is being provided or test procedures are not being followed.

Corrugated polyethylene culvert pipe shall meet the requirements of AASHTO M294 for Type S or Type D.

(B) End Treatments, Pipe Tees and Elbows

End treatments, pipe tees and elbows shall meet all applicable requirements of AASHTO M294, Section 7.8.

(C) Marking

Clearly mark each section of pipe, end section, tee, and elbow and other accessories according to the Department's HDPE Pipe QC/QA Program:

(1) AASHTO designation

(2) The date of manufacture

(3) Name or trademark of the manufacturer

When polyethylene pipe, end sections, tees, and elbows have been inspected and accepted they will be stamped with the Department seal of approval. Do not use pipe sections, flared end sections, tees, or elbows which do not have this seal of approval.

SECTION 1034
SANITARY SEWER PIPE AND FITTINGS

1034- 1 CLAY PIPE

Use extra strength vitrified clay sewer pipe conforming to ASTM C 700. Manufacture all joints and seals in accordance with ASTM C 425.

1034-2 POLYVINYL CHLORIDE (PVC) PLASTIC PIPE

(A) Gravity Flow Sewer Pipe

Use PVC plastic pipe that conforms to the requirements of ASTM D 3034 with a minimum SDR of 35. Use pipe with push-on type joints having bells made as an integral part of the pipe conforming to ASTM D 3212.

(B) Force Main Sewer Pipe

Pressure Rated Pipe:

Use PVC pipe conforming to ASTM D 2241 with a minimum SDR of 21 and minimum pressure rating of 200 psi. Use pipe with push-on type joints having bells made as an integral part of the pipe conforming to ASTM D 3139.

Pressure Class Pipe:

Use PVC pipe conforming to ANSI/AWWA C900 with a minimum DR of 18 and a minimum pressure class of 150 psi. Use pipe with push-on type joints having bells made as an integral part of the pipe conforming to ASTM D 3139.

1034- 3 CONCRETE SEWER PIPE

Use reinforced concrete sewer pipe conforming to ASTM C 76 or AASHTO M-170 with a Class III minimum rating. Use pipe with gasket joints conforming to ASTM C 443 or AASHTO M-198 type A or B.

1034- 4 DUCTILE IRON PIPE

(A) Gravity Flow Sewer Pipe

Use ductile iron pipe that conforms to ASTM A 746 or ANSI/AWWA C151/A21.51.

Use ductile iron pipe fittings and specials conforming to
ANSI/AWWA C110/A21.10 for standard size fittings or
ANSI/AWWA C153/A21.53 for compact fittings

Use pipe and fittings with push-on joints conforming to ANSI/AWWA C111/A21.11.

(B) Force Main Sewer Pipe:

Use ductile iron pipe that conforms to ANSI/AWWA C151/A21.51.

Use ductile iron pipe fittings and specials conforming to
ANSI/AWWA C110/A21.10 for standard size fittings or

ANSI/AWWA C153/A21.53 for compact fittings. Manufacture fittings with a cement mortar lining and a seal coat in accordance with ANSI/AWWA C104/A21.4.

Use pipe and fittings with either mechanical joints or push-on joints conforming to ANSI/AWWA C111/A21.11. When required or necessary, use approved type joint restraint devices with a minimum working pressure rating of 200 psi and a factor of safety of 2.

1034- 5 ACRYLONITRILE-BUTADIENE-STYRENE (ABS) PIPE

Acrylonitrile-butadiene-styrene (ABS) truss pipe shall meet the requirements of ASTM D2680. Provide joints for (ABS) truss sewer pipe that are of the extra-tight solvent welded joint type conforming to ASTM D2680.

Use ABS solid wall lateral sewer pipe for diameter of 4" to 6" that conforms to ASTM D2751 and is of sufficient wall thickness and strength to withstand the various earth and impact loads that bear on the installed pipe. Provide pipe that is circular in shape with no appreciable distortion and conforms to ASTM D2751. Provide joints for (ABS) solid wall lateral sewer pipe that are of the extra-tight solvent welded joint type conforming to ASTM D2751.

SECTION 1036
WATER PIPE AND FITTINGS

General

All materials when used to convey potable drinking water shall meet the requirements of the *National Sanitation Foundation Standard number 6*1.

1036- 1 COPPER PIPE

For indoor plumbing use copper pipe and sweated fittings conforming to ASTM B 88 for the type and temper called for in the plans and Specifications. Cast fittings for copper pipe shall meet the requirements of ASTM B 61 or ASTM B 62.

For buried service, use copper water pipe and tube conforming to ASTM B 88 soft annealed type K. Use flared or compression type fittings conforming to ANSI/AWWA C800 and local plumbing codes to connect pipe and tube.

1036-2 PLASTIC PIPE

(A) Polyvinyl Chloride (PVC) Pipe

Pressure Rated Pipe

Use PVC pipe conforming to ASTM D 2241 with a minimum SDR of 21 and minimum pressure rating of 200 psi. Use pipe with push-on type joints having bells made as an integral part of the pipe conforming to ASTM D 3139.

Pressure Class Pipe

Use PVC pipe conforming to ANSI/AWWA C900 with a minimum DR of 18 and a minimum pressure class of 150 psi. Use pipe with push-on type joints having bells made as an integral part of the pipe conforming to ASTM D 3139.

(B) Polyethylene (PE) Pipe

Use PE water pipe and tubing that conforms to AWWA C 901 with a minimum pressure class of 200 psi.

1036-3 BLANK

1036-4 STEEL PIPE

(A) Water Pipe

Use galvanized steel pipe meeting the requirements of ASTM A 53 for standard weight. Fittings for steel water pipe shall meet the requirements of ASTM A126 for Class B iron or of ASTM A197. Galvanize all fittings in accordance with ASTM A153.

(B) Encasement Pipe

Use steel pipe meeting an ASTM specification with the minimum yield strength of 35,000 psi. Use pipe that is circular in shape and straight in length.

1036-5 DUCTILE IRON PIPE AND FITTINGS

Use ductile iron pipe that conforms to ANSI/AWWA C151/A21.51.

Use ductile iron pipe fittings and specials conforming to ANSI/AWWA C110/A21.10 for standard size fittings or ANSI/AWWA C153/A21.53 for compact fittings. Manufacture fittings with a cement mortar lining and a seal coat in accordance with ANSI/AWWA C104/A21.4.

Use either mechanical joints or push-on joints conforming to ANSI/AWWA C111/A21.11. When required or necessary, use approved type joint restraint devices with a minimum working pressure rating of 200 psi and a factor of safety of 2.

1036-6 FIRE HYDRANTS

Use dry barrel type fire hydrants conforming to ANSI/AWWA C502 with a minimum 4-1/2" diameter valve opening with a 6" mechanical joint inlet connection, with two 2-1/2" hose connections and with one 4-1/2" pumper connection. Outlets shall have national standard fire hose coupling threads. Use a fire hydrant with a minimum bury length of 36". Securely chain nipple caps to the barrel. Paint hydrants with one coat of primer paint and two coats of an approved paint of the owner's standard color. Apply the final coat after hydrant installation.

1036-7 WATER VALVES.

(A) Gate Valves

Use iron body gate valves which conform to ANSI/AWWA C500 for bronze mounted, double disc, parallel seat type valves or to ANSI/AWWA C509 for resilient

seat type valves. For buried service use gate valves with non-rising stems, 2" square operating nuts, O-ring seals, and which open by turning counter clockwise. Gate valves shall have mechanical joint ends conforming to ANSI/AWWA C111/A21.11. Gate valves shall have a design working water pressure of 200 psi.

(B) Bronze Gate Valves

Use bronze gate valves conforming to ASTM B 62 with tee head operating nuts and solid wedges. Use valves with a design working pressure of 200 psi.

(C) Tapping Valves

Use tapping valves conforming to Section 1036-7A with appropriately sized openings, with flanged by mechanical joint ends, and pressure rated at 200 psi.

1036-8 SLEEVES, COUPLINGS, AND MISCELLANEOUS

(A) Tapping Sleeves

Use cast iron, ductile iron, or Type 304 stainless steel tapping sleeves pressure rated at 200 psi. Use either the split sleeve type with mechanical joint ends or the full circle type with double seals. Manufacture the outlet flange to mate with the tapping valve flange.

(B) Transition Sleeves and Couplings

Use sleeve type couplings for transitioning between plain ends of different pipe types. Manufacture couplings in conformance with ANSI/AWWA C219 for a rated working pressure of 200 psi. Coat the coupling at the factory with an epoxy in conformance with ANSI/AWWA C210 or ANSI/AWWA C213.

1036-9 SERVICE LINE VALVES AND FITTINGS

Use corporation stops and curb stops of all bronze material and high-pressure construction conforming to ANSI/AWWA C800.

Use tapping saddles of high-pressure construction, shaped to conform to the pipe, and in conformance with ANSI/AWWA C800.

Use high-pressure fittings manufactured in conformance with ANSI/AWWA C800.

SECTION 1040
MASONRY

1040-1 BRICK

Use clay or shale brick that meets the requirements of ASTM C62 for Grade SW, except as otherwise provided below.

Use brick of uniform standard commercial size, with straight and parallel edges and square corners that are burned hard and entirely true, free from injurious cracks and flaws,

tough, strong, and have a clear ring when struck together. The sides, ends, and faces of all brick shall be plane surfaces at right angles and parallel to each other.

Brick of the same manufacturer shall not vary more than plus or minus 1/16" in thickness, plus or minus 1/8" in width, and plus or minus 1/4" in length.

Concrete brick may be used in lieu of clay or shale brick when designated on the plans or in the specifications. Concrete brick shall meet the requirements of ASTM C55 for Grade S-II except that the absorption of brick used in minor drainage structures shall not exceed 10 lbs./ft.^{3}.

1040-2 CONCRETE BUILDING BLOCK

Use concrete building block from sources that participate in the Department's Solid Concrete Masonry Brick/Unit Quality Control/Quality Assurance Program. A list of these sources in North Carolina and adjoining states is available from the Materials and Tests Unit in Raleigh.

Use concrete building block that meets the requirements of ASTM C90 for Type II. Block is pink in color and is to be substantially free from chips and cracks.

Solid concrete block to be used in lieu of clay brick for minor drainage structures shall meet the requirements of ASTM C139 except that the nominal dimensions shall be 4" x 8" x 16".

Concrete block for block manholes shall meet the requirements of ASTM C139.

1040-3 CONCRETE PAVING BLOCK

Use concrete building block from sources that participate in the Department's Solid Concrete Masonry Brick/Unit Quality Control/Quality Assurance Program. A list of these sources in North Carolina and adjoining states is available from the Department's Laboratory in Raleigh.

Concrete paving block shall be solid concrete block and meet the requirements of ASTM C139 except that the nominal dimensions shall be 4" x 8" x 16". The block shall have a uniform surface color and texture.

1040-4 CEMENT

Portland cement shall meet the requirements of Article 1024-1.

Masonry cement shall meet the requirements of ASTM C91.

1040-5 HYDRATED LIME

Hydrated lime shall meet the requirements of ASTM C207 for Type N.

1040-6 MORTAR SAND

Mortar sand shall meet the requirements of Article 1014-1, except that it shall meet the gradation requirements for No. 4S sand shown in Table 1005-2.

1040-7 WATER

Water shall meet the requirements of Article 1024-4.

1040-8 MORTAR

Mortar used in all brick masonry and block masonry shall be proportioned as shown below for either mix No. 1 or No. 2. All proportions are by volume. Do not add any more water than is necessary to make a workable mixture.

Mix No. 1:	1 part portland cement
	1/4 part hydrated lime
	3 3/4 parts mortar sand (maximum)
Mix No. 2:	1 part portland cement
	1 part masonry cement
	6 parts mortar sand (maximum)

The requirements of Articles 1040-4, 1040-5, 1040-6, and 1040-7, are applicable to all cement, hydrated lime, mortar sand, and water.

For the hydrated lime and cement portion of Mix No. 1,the Contractor may substitute Type M or Type S masonry cement that meets ASTM C270 For Type S masonry cement the minimum compressive strength of the test specimens shall be 2500 psi at 28 days and the test specimens shall be composed of 1 part Type S masonry cement and 3 parts sand. Furnish a Type 3 certification for the Type M or Type S masonry cement.

1040-9 CEMENT GROUT

Use cement grout that consists of a mixture of 1 part portland cement to 3 parts mortar sand with no more water than is necessary to make a workable mixture.

Apply the requirements of Article 1040-4, 1040-6, and 1040-7 to all cement, mortar sand, and water.

SECTION 1042
RIPRAP MATERIALS

1042-1 PLAIN RIPRAP

Stone for plain riprap consists of field stone or rough unhewn quarry stone. The stone shall be sound, tough, dense, resistant to the action of air and water, and suitable in all other respects for the purpose intended. Where broken concrete from demolished structures or pavement is available, it may be used in place of stone provided that such use meets with the approval of the Engineer. However, the use of broken concrete that contains reinforcing steel will not be permitted.

All stone shall meet the approval of the Engineer. While no specific gradation is required, there should be equal distribution of the various sizes of the stone within the

required size range. The size of an individual stone particle will be determined by measuring its long dimension.

Stone or broken concrete for riprap shall meet the requirements of Table 1042-1 for the class and size distribution.

TABLE 1042-1
ACCEPTANCE CRITERIA FOR RIPRAP
AND STONE FOR EROSION CONTROL

	REQUIRED STONE SIZES – INCHES		
CLASS	**MINIMUM**	**MIDRANGE**	**MAXIMUM**
A	2	4	6
B	5	8	12
1	5	10	17
2	9	14	23r

No more than 5.0% of the material furnished can be less than the minimum size specified nor no more than 10.0% of the material can exceed the maximum size specified.

1042-2 TESTING

Test riprap materials in accordance with the requirements of this section and Sections 1005-4(E) Resistance to Abrasion, and 1005-4(F) Soundness. Satisfactory resistance to abrasion will be considered to be a percentage of wear of not greater than 55 percent. Satisfactory soundness will be considered to be a loss in weight of not greater than 15 percent when subjected to 5 alterations of the soundness test.

SECTION 1044
SUBSURFACE DRAINAGE MATERIALS

1044-1 SUBDRAIN FINE AGGREGATE

The subdrain fine aggregate shall meet the gradation requirements for No. 2S or No. 2MS sand as shown in Table 1005-2.

1044-2 PIPE AND FITTINGS--GENERAL

Pipe and fittings may be, at the option of the Contractor, either concrete, corrugated steel, bituminized fiber, or corrugated plastic.

1044-3 CONCRETE PIPE AND FITTINGS

Non-perforated concrete pipe and pipe fittings shall meet the requirements of AASHTO M86 for standard strength nonreinforced concrete pipe.

Perforated concrete pipe shall meet the requirements of AASHTO M175 for standard strength perforated nonreinforced concrete underdrainage pipe.

Joint materials shall meet the requirements of Section 1028.

1044-4 CORRUGATED STEEL PIPE AND FITTINGS

Non-perforated corrugated steel pipe and pipe fittings shall meet the requirements of Subarticle 1032-3(A).

Perforated corrugated steel pipe shall meet the requirements of AASHTO M36.

Fabricate the corrugated steel pipe from steel sheets having a minimum thickness of 0.052".

1044-5 POLYVINYL CHLORIDE PLASTIC PIPE

Polyvinyl chloride plastic pipe shall meet the requirements of ASTM D1785.

1044-6 CORRUGATED PLASTIC PIPE AND FITTINGS

Corrugated plastic pipe and fittings shall meet the requirements of AASHTO M252 for heavy duty tubing, except that the maximum stretch resistance shall be 10 percent.

1044-7 OUTLET PIPE

Outlets constructed of PVC Schedule 40 pipe shall meet the requirements of ASTM D 2665. HDPE pipe shall meet the requirements of AASHTO M-294, Type S.

SECTION 1046
GUARDRAIL MATERIALS

1046-1 GENERAL

Use guardrail materials from sources meeting requirements of the Department's Brand Certification Program for guardrail. A list of these sources is available from the Materials and Test Unit's Central Laboratory. The Department will remove a manufacturer of guardrail materials from this program in the event that the monitoring efforts indicated that non-specification material is being provided or test procedures are not being followed.

The following types of guardrail materials and all associated accessories may be accepted under this program.

Rail elements.
Posts and offset blocks
Terminal sections
Anchor units
Transition sections
Hardware

1046-2 RAIL ELEMENTS

The rail element and terminal sections shall meet the requirements of AASHTO M180 for Class A, Type 2.

1046-3 POSTS AND OFFSET BLOCKS

(A) General

The Contractor may, at his option, furnish any one of the following types of steel guardrail posts. Only one type of post will be permitted at any one continuous installation. Use structural steel posts throughout the project, unless otherwise directed or detailed in the plans.

(1). Steel W6 x 8.5 or W6 x 9.0 posts.

(2) Steel 4.5" x 6.0" "C" shape posts.

The Contractor may at his option furnish either of the following types of treated timber posts if specifically directed or detailed in the plans. Only one type of post will be permitted at any one continuous installation.

(1) Timber 6” x 8” posts

(2) Timber 8” x 8” posts

(B) Structural Steel Posts

Fabricate steel posts for guardrail of the size and weight shown on the plans from structural steel complying with the requirements of Section 1072. Metal from which C shape posts are fabricated shall meet the requirements of ASTM A570 for any grade of steel except that mechanical requirements that shall meet the requirements of ASTM A36. Punch or drill the holes for connecting bolts. Burning will not be permitted. After fabrication the posts shall be galvanized in accordance with Section 1076.

(C) Treated Timber Posts

Timber guardrail posts shall be of treated southern pine meeting the requirements of Article 1082-2 and 1082-3.

Bore bolt holes to a driving fit for the bolts. A minus tolerance of 1 percent will be allowed in the length of the post. Perform all framing and boring before the posts receive preservative treatment.

(D) Offset Blocks

Provide 8" deep recycled plastic or composite offset blocks that have been approved for use with the guardrail shown in the standard drawings and/or plans. Only one type of offset block will be permitted at any one continuous installation. Prior to beginning the installation of recycled offset block, submit the FHWA acceptance letter for each type of block to the Engineer for approval.

Treated timber offset blocks with steel beam guardrail will not be allowed unless required by Specifications, directed by the Engineer or detailed in the plans. Steel offset blocks with steel beam guardrail will not be allowed.

Recycled plastic or composite offset blocks shall be made from no less than 50% recycled plastic or composite and shall meet the following minimum requirements:

Specific Gravity:.....0.950
Compressive Strength in Lateral Direction:..1600 psi
Maximum Water Absorption:.....10% by weight

Maximum Termite and Ant Infestation: 10%
Testing: ..... Shall pass NCHRP Report 350, Test Level 3 by CRASH TESTING
Approval: ..... Shall be approved for use by the FHWA

1046-4 HARDWARE

Provide all hardware as indicated on the plans that is galvanized in accordance with ASTM A153.

1046-5 ANCHORS AND ANCHOR ASSEMBLIES

Each shipment of guardrail terminal end sections, anchors and anchor assemblies shall be shipped from the manufacture with a current parts list and installation guide. Units not having the above documents will be rejected.

The requirements of Articles 1046-1, 1046-2, and 1046-3 are applicable to rail elements, terminal sections, posts, offset blocks, and hardware.

Reinforcing steel shall meet the requirements of Article 1070-2. Steel plates shall meet the requirements of ASTM A36. Anchor rods shall meet the requirements of ASTM A663 for Grade 65.

Anchor cable shall be 3/4" wire rope having a minimum breaking strength of 21.4 tons and galvanized. Use commercial quality galvanized steel cable thimbles. Use commercial quality drop forged galvanized steel cable clips. The fitting and stud for the anchor cable shall be suitable for cold swaging and be galvanized. After being swaged on the cable, the fitting and stud assembly, including swaged joint and cable, shall have a minimum breaking strength of 21.4 tons.

Perform welding in accordance with Article 1072-20.

Welded components shall be galvanized after welding in accordance with ASTM A123. All other metal parts shall be galvanized in accordance with ASTM A153, except where otherwise specified in Articles 1046-1, 1046-2, and 1046-3.

1046-6 REPAIR OF GALVANIZING

Perform repair of galvanizing in accordance with Section 1087-6.

1046-7 CABLE GUIDERAIL

Posts, hardware, and miscellaneous components shall meet the applicable requirements of this Section, the plans and the manufacture's requirements.

Furnish Cable guiderail manufactured in accordance with AASHTO M-30, Type 1, Class A.

For concrete anchors, furnish Class A concrete if cast in place; or use concrete meeting the requirements of Section 1077 if using precast concrete anchors.

Cable guiderail is not covered under the Brand Certification Program for guardrail materials. Sample cable guiderail according to Minimum Sampling Guide.

1046-8 ACCEPTANCE

Acceptance of guiderail materials and its accessories will be based on, but not limited to, visual inspections, classification requirements, check samples taken from material delivered to the project, and conformance to the annual Brand Registration.

Guiderail materials not meeting the above requirements will be rejected, unless written approval is obtained from the State Materials Engineer.

SECTION 1050
FENCE MATERIALS

1050-1 GENERAL

(A) Chain Link Fence

The Contractor may, at his option, furnish either a galvanized steel fence framework or an aluminum alloy fence framework unless otherwise specified in the contract.

Where a galvanized steel framework is used, the fence fabric may be either galvanized steel or aluminum coated steel, except where galvanized steel fabric is specified in the contract. The Contractor may, at his option, furnish any of the following galvanized steel framework systems:

SYSTEM G1

Line Posts ..... Steel Pipe
Terminal Posts (End, Corner, or Brace Posts) ..... Steel Pipe
Gate Posts, Double Gate ..... Steel Pipe
Gate Posts, Single Gate ..... Steel Pipe
*Brace Rail and Top Rail ..... Steel Pipe

SYSTEM G2

Line Posts ..... Steel H Post
Terminal Posts (End, Corner, Or Brace Posts) ..... Steel Pipe
Gate Posts, Double Gate ..... Steel Pipe
Gate Posts, Single Gate ..... Steel Pipe
*Brace Rail and Top Rail ..... Steel Pipe

SYSTEM G3

Line Posts ..... Roll Formed Steel
Terminal Posts (End, Corner, or Brace Posts) ..... Steel Pipe
Gate Posts, Double Gate ..... Steel Pipe
Gate Posts, Single Gate ..... Steel Pipe
*Brace Rail and Top Rail ..... Steel Pipe or Roll Formed Pipe

* Top rail to be used in lieu of tension wire only where called for in the itemized proposal.

Where an aluminum alloy framework is used, the fence fabric may be either aluminum alloy or aluminum coated steel. The Contractor may, at his option, furnish any of the following aluminum alloy framework systems:

SYSTEM A1

Line Posts ..... Aluminum Pipe
Terminal Posts (End, Corner, or Brace posts) ..... Aluminum Pipe
Gate Posts, Double Gate ..... Aluminum Pipe
Gate Posts, Single Gate ..... Aluminum Pipe
*Brace Rail and Top Rail ..... Aluminum Pipe

SYSTEM A2

Line Posts .....Aluminum H Post
Terminal Posts (End, Corner, or Brace Posts) ..... Aluminum Pipe
Gate Posts, Double Gate ..... Aluminum Pipe
Gate Posts, Single Gate ..... Aluminum Pipe
*Brace Rail and Top Rail ..... Aluminum Pipe

*Top rail to be used in lieu of tension wire only where called for in the itemized proposal.

Use the same type of fabric and framework materials throughout the project.

(B) Wire Gage

Whenever the term *gage* is used in this section to refer to a size of wire, it will be construed to mean the United States Steel Wire Gage regardless of whether or not the base metal of the wire is steel or a nonferrous metal.

1050-2 TIMBER POSTS AND BRACES

(A) General

All timber posts and braces shall be of treated southern pine meeting the requirements of Article 1082-2 and 1082-3, except as otherwise specified herein. Posts and braces may be either round or square, at the option of the Contractor, provided that the same shape is used throughout the project for both the posts and the braces. Post and brace sizes are shown on the plans in inches. The size refers to the diameter for round pieces, or to the edge dimension for square pieces. Square posts and braces shall be fully dressed S4S. An allowable tolerance of 1/2" scant for square pieces will be permitted from the dimensions called for on the plans.

Cut round wood posts and braces from sound solid trees, free from short or reverse bends in more than 1 plane. Do not use log veneer cores for posts and braces unless they contain at least one inch of Sapwood for their entire circumference on both ends. The post or brace shall not deviate more than 1" at any point from a straightedge held longitudinally against the piece.

All posts shall be free from ring shake, season cracks more than 1/4" wide, splits in the ends, and contain no unsound knots. Sound knots will be permitted provided the width of the knot does not exceed 1/3 the diameter of the post where it occurs. Groups of knots or any combination of defects that will impair the strength of the piece will not be permitted. The pieces shall show not less than 3 annual rings per inch and not less than 30 percent of summer wood.

A tolerance of 1" plus and 1/2" minus will be allowed for the diameter of round posts and braces, measured at the small end after peeling. Where they are out of round, this tolerance will apply to the smaller diameter, and the larger diameter shall not exceed the smaller by more than 20 percent. The maximum rate of increase in diameter at the butt shall be 1 1/2" in 10 feet.

A minus tolerance of 1 percent will be allowed in the length of both round and square posts. Cut the ends square.

(B) Optional Steel Posts and Braces

The Contractor will be permitted to use steel posts and braces for woven wire fence in lieu of timber posts and braces in those areas of the State located in or west of Vance, Franklin, Wake, Lee, Moore, and Richmond Counties. Use the same type of fence post and brace throughout the project. The optional steel posts and braces shall meet the requirements of Subarticle 1050-3(B).

1050-3 METAL POSTS AND RAILS

(A) Chain Link Fence

Posts shall meet the requirements of AASHTO M 181 except as otherwise provided by this subarticle.

Steel H posts shall have a minimum yield strength of 45,000 psi and weigh 3.26 pounds per foot. Galvanize steel H posts in accordance with ASTM F 1043 with a Type A coating. Aluminum H posts shall weigh 1.25 pounds per foot.

Roll formed steel line posts shall be a 1.625" x 1.875" section weighing 2.40 lb./lf. after galvanizing and be formed from 0.121" thick sheet having a minimum yield strength of 45,000 psi. Roll formed steel brace rails and top rails shall be a 1.250" x 1.625" section weighing 1.35 lb./lf. after galvanizing and be formed from 0.080" thick sheet steel having a minimum yield strength of 45,000 psi. Galvanize all roll formed members after fabrication in accordance with ASTM F 1043 with a Type A coating.

Vinyl coated posts shall be pipe posts meeting the requirements of AASHTO M 181, and have a fusion bonded vinyl coating at least 6 mils thick. The vinyl shall meet the requirements of Section 6 of AASHTO M 181 or if a standard color not listed in M 181 is used, the vinyl shall meet the color requirements in ASTM F 934 Table 1.

Furnish brace rails with suitable metal connections to fasten them securely to the posts. Provide the top rail not less than 6" long with a minimum thickness of 0.051" if steel, or 0.062", 6063-T6 aluminum alloy and in minimum lengths of 15 feet. The complete top rail assembly shall form a continuous rail passing through the top fittings of the line posts and be furnished with suitable metal connections to fasten it to the posts at each end.

For pipe 1.90” O.D. and under, the outside diameter at any point shall not vary more than 1/64” over no more than 1/32” under the standard specified. For pipe 2.375”O.D. and over, the outside diameter shall not vary more than ±1% from the

standard specified nor shall the minimum wall thickness at any point be more tan 12.5% under the nominal wall thickness specified.

A 10% minimum weight tolerance will be allowed for all steel posts and rails.

(B) Woven Wire Fence

Steel posts used in lieu of 4" timber posts shall be a standard studded T section 7'-6" long designed exclusively for use as a fence post and be equipped with a metal anchor plate securely attached to the post. The T posts shall weigh 1.33 lb. per linear foot exclusive of the weight of the anchor plate, and have a total weight, including anchor plate, of 10.65 lb. Nominal dimensions of the T post shall be 1 3/8 " wide and 1 3/8" deep. A tolerance of plus or minus 3/16" will be permitted from these nominal dimensions. The anchor plate shall be sufficiently sturdy to withstand the strain of driving with no loss of effectiveness, and have a minimum area of 14.0 square inches.

Steel posts used in lieu of 5" timber posts may be either tubular posts or angle posts. They shall be 8'-0" long and be embedded in a concrete anchor at least 3'-3" deep and 10" in diameter. Fit tubular posts with ornamental tops that fit over the top of the post to cap against moisture. Fabricate the tubular posts from 2" diameter pipe meeting the requirements of AASHTO M 181 for Grades 1 or 2 metallic coated posts and rails. Fabricate angle posts from angle sections measuring 2 1/2"x 2 1/2"x 1/4", with a plus or minus tolerance of 1/16" on the 2 1/2" dimension and 0.015" on the 1/4" dimension, and weighing 4.10 lbs. per foot.

Use steel braces with steel posts and may be either tubular braces or angle braces to match the posts. Furnish the braces with suitable metal connections to fasten them securely to the posts. Fabricate tubular braces from 1 1/4" diameter pipe meeting the requirements of AASHTO M 181 for Grades 1 or 2 metallic coated posts and rails. Fabricate angle braces from angle sections measuring 2" x 2" x 1/4" with a plus or minus tolerance of 3/64" on the 2" dimension and 0.010" on the 1/4" dimension, and weighing 3.19 lbs. per foot.

A 10% minimum weight tolerance will be allowed for all steel posts and braces.

For pipe 1.90” O.D. and under, the outside diameter at any point shall not vary more than 1/64” over no more than 1/32” under the standard specified. For pipe 2.375” O.D. and over, the outside diameter shall not vary more than ±1% from the standard specified nor shall the minimum wall thickness at any point be more than 12.5% under the nominal wall thickness specified.

Galvanize all steel posts and braces other than tubular members in accordance with the requirements of ASTM A 123.

1050-4 BARBED WIRE

Barbed wire shall meet the requirements of ASTM A 121 except as otherwise provided in this subarticle.

The barbed wire may be, at the option of the Contractor, either galvanized steel or aluminum coated steel except that where aluminum chain-link fabric is used, galvanized

steel barbed wire shall not be used. Use the same type of material throughout the project. All barbed wire shall have 4 point barbs spaced not more than 5" apart. Single strand barbed wire will not be acceptable.

Two strand galvanized steel barbed wire shall be fabricated from either 12 1/2 gage or 15 1/2 gage strand wire with 4 point galvanized steel 14 gage barbs. The 12 1/2 gage shall be Standard Grade with a Class 3 coating on the wire and a Class 1 coating on the barbs. The 15 1/2 gage shall be Chain Link Fence Grade with a Class 3 coating on both the wire and barbs.

Two strand aluminum coated steel barbed wire shall be fabricated from two strands of 12 1/2 gage aluminum coated steel wire with the four point barbs being either 14 gage aluminum coated steel or aluminum alloy wire.

1050-5 WOVEN WIRE

Woven wire fencing shall conform to ASTM A 116 or AASHTO M 279. The fence fabric shall be 47" high, with 10 horizontal strands. Space the strands 3" apart at the bottom and 8" apart at the top with progressive spacing between. Space vertical strands at 6" intervals. Any of the following styles and coating classes may be used.

(A) Style 1047-6-9, Grade 60 (all horizontal and vertical strands of wire shall be 9 gage) with a Class 3 zinc coating.

(B) Style 1047-6-11, Grade 60 (top and bottom horizontal strands to be 9 gage wire, all other strands to be 11 gage) with a Class 3 zinc coating.

(C) Style 1047-6-12 1/2, Grade 125 (top and bottom horizontal strands of wire to be no smaller than 10 1/2 gage with a minimum breaking strength of 1610 lb, all other strands to be no smaller than 12 1/2 gage with a minimum breaking strength requirement for horizontal strands of 960 lb with a Class 3 coating.

Brace wire shall be a 9 gage steel in accordance with ASTM A 641, except that the minimum zinc coating shall be 0.80 oz/ sq. ft.

TABLE 1050-1
WIRE DIAMETER

Size Coated Wire, Gage	Nominal Diameter of Zinc Coated Wire, In.
6	0.192
7	0.177
9	0.148
10 1/2	0.128
11	0.120
12 12 1/2	0.106 0.099

1050-6 CHAIN LINK FABRIC

Chain link fence fabrics shall meet the requirements of AASHTO M 181. Galvanized steel fabric shall have a Class D coating. Polyvinyl coated fabric shall be Type IV, Class A or B and the vinyl coating shall be a standard color meeting AASHTO M 181 or ASTM F 934 Table 1.

The height of the chain link fence fabrics shall be as shown in the pay item description. Weave the fabric from 11 gage wire, unless otherwise required by the contract.

1050-7 FITTINGS, HARDWARE AND ACCESSORIES

All fittings, hardware and accessories to be used with the fencing shall meet the requirements of AASHTO M 181, AASHTO M 232, ASTM F 626 OR ASTM A 641 or ASTM A 809 except for the size, type and coating requirement that shall be that shall be as shown below in Table 1050-2 and elsewhere in this article.

Galvanize bolts, nuts, washers, and other threaded items in accordance with AASHTO M 232.

Where shown on the plans, fit the posts with ornamental tops. The base of tops to be used with pipe posts shall fit over the top of the post to guard against moisture.

TABLE 1050-2

Item	Gage or diameter (inch)	Coating (oz/sq. ft)	Coating (oz/sq. ft^2 Aluminum)	Remarks:
Tie wires, steel	9	0.90	0.40	For fastening chain link fabric and tension wire to tubular sections or to roll formed steel line posts.
Tie wires, Aluminum	6	---	---	Alloy 1350-H19 or approved equal
Clips, steel wire	7	0.90	---	For fastening chain link fabric and tension wire to H- posts
Clips, steel wire	11	0.85	---	For fastening woven wire fabric to steel posts
Hog rings, steel	12	0.80	0.40	For fastening chain link fabric to tension wire
Hog rings, aluminum	9	---	---	Alloy 1350-H19 or approved equal.
Truss rod, steel	5/16	2.00	---	---
Tension (stretcher) bars, steel	3/16 x 3/4	1.50	---	For connection of 1 3/4 in or 2 in. fabric to end, gate, and corner posts for fabric heights over 5 ft
Tension (stretcher) bars, steel	3/16 x 5/8	1.50	---	For connection of 1 3/4 in or 2 in. fabric to end, gate, and corner posts for fabric heights UP TO 5 ft
Tension (stretcher) bars, steel	1/4 x 3/8	1.50	---	For connection of 1 in fabric to end, gate, and corner posts
Staples, Nails or	9	0.35	---	For fastening woven wire to timber posts. Shall be the size and shape shown on the plans.
Tension wire braces	9	0.90	0.40	For woven wire fence
Post and line caps	---	1.30	---	For installation on top of posts to guard against moisture.
Rail and brace ends (pressed steel or cast iron)	---	1.30	---	---
Top rail steel sleeves	0.051 in.	1.30	---	For rail connections. Shall be fabricated to prevent movement along the rail.
Tension band	14	1.30	---	For fastening tension bar to posts
Brace band	12	1.30	---	For fastening rail to posts
Barbed wire extension arms (pressed steel or cast iron)	14	1.30	---	Shall be fitted with clips or slots for attaching the barbed wire to the arms.
Hinges, latches	---	2.00	---	---

Tension wire for use with galvanized steel chain link fabric shall meet the requirements of AASHTO M 181 for zinc coated tension wire. Tension wire for use with aluminum or aluminum coated chain link fabric may be either aluminum coated tension wire meeting the requirements of AASHTO M 181, or solid aluminum wire with a minimum diameter of

0.192". The aluminum for solid aluminum wire shall meet the requirements of ASTM B 211 for alloy 5056 or 6061, and have a minimum breaking strength of 1216 lbf and a minimum elongation of 10%.

Vinyl coated fittings and accessories shall be galvanized steel or aluminum coated steel meeting the requirements of this article and have a bonded vinyl coating. The vinyl shall meet the requirements of Section 6 of AASHTO M 181 and be a standard color meeting AASHTO M 181 or ASTM F 934 Table 1. The vinyl coating shall be at least 6 mils thick, except that the coating on tension wire, hog rings, and tie wires shall be at least 20 mils thick.

1050-8 REPAIR OF GALVANIZING

Repair of galvanizing shall be in accordance with Section 1076-6. Do not use aerosol can products for repairs.

SECTION 1052
SALT AND LIME STABILIZERS

1052-1 SODIUM CHLORIDE

Sodium chloride shall meet the requirements of AASHTO M143.

1052-2 CALCIUM CHLORIDE

Calcium chloride shall be Class S or L meeting the requirements of AASHTO M144.

1052-3 LIME

(A) Chemical Requirements

Quicklime and hydrated lime for soil stabilization shall meet the requirements of ASTM C977 except that it shall contain a minimum of 86 percent available calcium oxide (CaO) on an LOI-free basis.

(B) Physical Requirements

(1) Hydrated Lime

Hydrated lime shall have a minimum of 85 percent passing a No. 200 sieve.

(2) Quicklime

Grade quicklime so that 100% passes a 1/4" sieve.

(C) Sampling and Inspection

Furnish Type 1 or Type 2 material certifications with each shipment of lime attesting that the lime meets the requirements of the Specifications; however, the material will be subject to inspection, test, or rejection by the Engineer at any time.

Lime from more than one source or more than one type may be used on the same project, but the different limes shall not be mixed. Protect the lime from exposure until used and sufficiently dry it to flow freely when handled.

SECTION 1054
MISCELLANEOUS MATERIALS

1054-1 RIGHT OF WAY MARKERS

(A) General

The Contractor may, at his option, use either granite right of way markers or concrete right of way markers.

(B) Concrete

Concrete right of way markers shall be constructed of concrete in accordance with the requirements of Section 1077. Reinforcement shall meet the requirements of Article 1070-2 for steel bar reinforcement.

Precast the right of way marker in watertight forms of a size and shape that will produce a completed marker of the dimensions shown on the plans. Construct the forms so as to impress the plastic concrete with the lettering and markings shown on the plans.

Cure the concrete in accordance with Article 420-16. Give that portion of the right of way marker that will be above the surface of the ground ordinary surface finish in accordance with Subarticle 420-18(B).

(C) Granite

Make granite right of way markers from granite that is hard and durable, of a light color, free from seams which impair its structural integrity, and of a good, smooth splitting appearance. Quarry and finish the markers to the dimensions indicated on the plans. Drill holes will be permitted in the sides and bottom.

1054-2 BLANK

1054-3 DECK DRAINS

Provide deck drains made of polyvinyl chloride plastic pipe or of steel pipe. Use the type of pipe as shown on the plans.

Polyvinyl chloride plastic pipe shall meet the requirements of ASTM D1785 or D2665, and have four 1/2" square lugs shop glued at approximately equal spacing around the pipe at 3" from the top end of each deck drain.

Steel pipe shall meet the requirements of ASTM A53 for standard weight galvanized pipe.

1054-4 FUNNELS AND FUNNEL DRAINS

(A) Funnels

Fabricate funnels for corrugated aluminum alloy pipe from clad aluminum alloy sheets meeting the requirements of AASHTO M196. Perform fabrication by riveting. The completed funnel shall meet all applicable requirements of AASHTO M196.

Fabricate funnels for corrugated steel pipe of steel meeting the applicable requirements of AASHTO M218. Fabrication may be by riveting or by welding. The completed funnel shall meet all applicable requirements of AASHTO M36.

(B) Funnel Drain Pipe, Elbows and Fittings

Funnel drain pipe, elbows, and other fittings may be, at the option of the Contractor, either corrugated aluminum alloy or corrugated steel.

Corrugated aluminum alloy pipe, elbows, and other fittings shall meet the requirements of Article 1032-2.

Corrugated steel pipe, elbows, and other fittings shall meet the requirements of Article 1032-3.

1054-5 SYNTHETIC ROVING

Use either fiberglass roving or polypropylene roving for synthetic roving.

Form fiberglass roving material from continuous fibers drawn from molten glass, coated with a chrome-complex sizing compound, collected into strands and lightly bound together into a roving without the use of a binding agent or other deleterious substance. Wind the roving into a cylindrical package so that the material can be continuously withdrawn from the center using a compressed air ejector so that the roving expands into a mat of glass fibers on the soil surface.

Form polypropylene roving material from continuous strands of fibrillated polypropylene yarn. Wind the roving onto cylindrical packages so that the roving can be continuously fed from the outside of the package through an ejector driven by compressed air and expanded into a mat of polypropylene strands. The product shall not contain agents toxic to plant or animal life.

Furnish a Type 3 Certification in accordance with Article 106-3 certifying that the fiberglass roving is an electrical grade material meeting the requirements shown in Table 1054-2.

TABLE 1054-1
FIBERGLASS ROVING PROPERTIES

Property	Limits	Test Methods
Strands/Rove	36-44	End Count
Fiber Diameter, in. (Trade Designation G)	0.00035-0.00045	ASTM D578

TABLE 1054-2
POLYPROPYLENE ROVING PROPERTIES

Property	Limits	Test Methods
Strands/Rove	20-30	End Count
Fiber Diameter, in. (Trade Designation G)	0.0094	Theoretical
Yards/lb. of Rove	515	ASTM D1907

1054-6 GROUT FOR CONCRETE ROADWAY TRAFFIC BARRIER

Use grout that is a commercially manufactured non-shrink, non-metallic material meeting the requirements of these Specifications when water or water and aggregate is added in accordance with the manufacturer's recommendations.

The grout shall be free of soluble chlorides and contain less than one percent soluble sulfate.

Initial setting time shall not be less than 10 minutes when tested in accordance with ASTM C266.

Compressive strength shall be at least 5000 psi at 3 days.

Compressive strength in the laboratory will be determined in accordance with ASTM C109 except that the test mix shall contain only water and the dry manufactured material. Compressive strength will be determined in the field by molding and testing 4" x 8" cylinders in accordance with AASHTO T22.

When tested in accordance with ASTM C666, Procedure A, the durability factor of the grout shall not be less than 80.

The quantity of water added to the mix shall be in accordance with the manufacturer's recommendations.

Aggregate may be added to the mix only where recommended or permitted by the manufacturer. The quantity and gradation of the aggregate will be in accordance with the manufacturer's recommendations.

Furnish a Type 4 material certification showing results of tests conducted to determine the properties listed in this Specification and to assure that the material is non-shrink.

The Engineer reserves the right to reject material based on unsatisfactory performance.

SECTION 1056
ENGINEERING FABRICS

1056-1 GENERAL

The fabric shall consist of strong rot-proof synthetic fibers formed into a woven fabric or a non-woven needle-punched fabric meeting all applicable requirements of this section.

The fabric shall be free from any treatment or coating that might significantly alter its physical properties before or after installation. The fabric fibers shall contain stabilizers and/or inhibitors to make the filaments resistant to deterioration resulting from ultraviolet or heat exposure. The fabric shall be a pervious sheet of synthetic fibers oriented into a stable network so that the fibers retain their relative position with respect to each other. Finish the edge of the fabric to prevent the outer fibers from pulling away from the fabric. The fabric shall be free of defects or flaws which significantly affect its physical and/or filtering properties. Sheets of fabric may be bonded together or sewn with a fungus resistant material. Do not use nylon thread for sewn seams. No deviation from any physical requirements will be permitted due to the presence of the seam.

During all periods of shipment and storage, wrap the fabric in a heavy duty protective covering to protect the fabric from direct sunlight, mud, dust, dirt, and debris. Do not expose the fabric to temperatures greater than 140°F.

When anchor pins are required, fabricate them of steel, 3/16" in diameter, at least 18" long, pointed at one end, and have a head that will retain a steel washer having an outside diameter of no less than 1.5".

When wire staples are required, provide staples that meet the requirements of Subarticle 1060-8 (D).

1056-2 ACCEPTANCE

Fabric with defects, flaws, deterioration or damage will be rejected.

Use engineering fabrics that have been evaluated by NTPEP.

Furnish a Type 1 Certified Mill Test Report, Type 2 Typical Certified Mill Test Report, or Type 4 Certified Test Report for the fabric in accordance with Article 106-3; however, the material will be subject to inspection, test, or rejection by the Engineer at any time.

1056-3 PHYSICAL PROPERTIES

See Table 1056-1.

Table 1056-1
Physical Properties of Engineering Fabrics

Physical Property	**ASTM TEST Method**	**Type 1**	**Type 2**	Type 3		**Type 4**
				Class A	**Class B**	
Typical Applications		Shoulder Drain	Under Riprap	**Temporary Silt Fence**		Soil Stabilization
Grab Tensile Strength	D4632	90 lb.	200 lb.	50 lb.	100 lb.	200 lb.
Elongation	D4632	80% Max.	15% Min.	30% Max.	25% Max.	--
Trapezoidal Tear Strength	D4533	90 lb.	90 lb.	--	--	80 lb.
Puncture Strength	D4833	45 lb.	80 lb.	30 lb.	60 lb.	80 lb.
Apparent Opening Size	D4751	#60 sieve	#60 sieve	#30 sieve		#40 sieve
Ultraviolet Exposure Strength Retention (at 500 hours)	D4355	50%	50%	70%		50%
Permeability	D4491	0.2 cm/sec	--	--		--
Permittivity	D4491	--	--	0.15 sec^{-1}		0.05 sec^{-1}

NOTES:

1. Type 1 fabric shall be non-woven needle-punched only with a minimum fabric weight of 4 oz/sy.
2. Type 3 fabric shall have 36" minimum roll width.
3. Sieve size of fabric shall be equal to or higher than value specified; opening size of fabric shall be equal or smaller than value specified.
4. All minimum strength requirements are minimum average roll values in the weakest principal direction.
5. All fabrics shall exhibit no fungal growth as tested by ASTM G21.

SECTION 1060
LANDSCAPE DEVELOPMENT MATERIALS

1060-1 GENERAL

Supply certifications for all landscape development materials as required below. If no certification is required, supply the Department with a statement certifying that all materials conform to these Specifications and those of the NC Department of Agriculture or both.

1060-2 FERTILIZER

The quality of all fertilizer and all operations in connection with the furnishing of this material shall comply with the requirements of the North Carolina Fertilizer Law and with the rules and regulations, adopted by the North Carolina Board of Agriculture in accordance with the requirements of said law, in effect at the time of sampling. All fertilizer will be subject to sampling and testing by the Engineer, or by an authorized representative of the North Carolina Department of Agriculture, or both.

Dry fertilizer shall be manufactured from cured stock. Care for the fertilizer during handling and storing in such a manner that it will be protected against hardening, caking, or loss of plant food values. Pulverize any hardened or caked fertilizer to its original condition before being used.

Store and care for liquid fertilizer after manufacture in a manner that will prevent loss of plant food values, and maintain or reblend a homogeneous blend of plant food elements to the original condition immediately before use.

1060-3 LIMESTONE

The quality of all limestone and all operations in connection with the furnishing of this material shall comply with the requirements of the North Carolina Lime Law and with the rules and regulations, adopted by the North Carolina Board of Agriculture in accordance with the requirements of said law, in effect at the time of sampling. All limestone will be subject to sampling and testing by the Engineer, or by an authorized representative of the North Carolina Department of Agriculture, or both.

Limestone shall be agricultural grade ground limestone. Either dolomitic or calcitic limestone may be used.

All limestone shall contain not less than 90 percent calcium carbonate equivalents. Dolomitic limestone shall contain not less than 10 percent of magnesium. Grade dolomitic limestone so that at least 90 percent will pass through a U.S. Standard 20 mesh screen, and at least 35 percent will pass through a U.S. Standard 100 mesh screen. Grade calcitic limestone so that at least 90 percent will pass through a U.S. Standard 20 mesh screen, and at least 25 percent will pass through a U.S. Standard 100 mesh screen. Where the current grading requirements of the North Carolina Board of Agriculture are different from the above, the requirements of the Board of Agriculture will apply.

During handling and storing, care for the limestone in such manner that it will be protected against hardening or caking. Pulverize any hardened or caked limestone to its original condition before being used.

1060-4 SEED

The quality of all seed and all operations in connection with the furnishing of this material shall comply with the requirements of the North Carolina Seed Law and with the rules and regulations, adopted by the North Carolina Board of Agriculture in accordance with the requirements of said law, in effect at the time of sampling, and with the quality requirements of the specifications. All seed will be subject to sampling by the Engineer, or by an authorized representative of the North Carolina Department of Agriculture, or both; and will be tested by the North Carolina Department of Agriculture. Supplementary testing for seed germination may be performed by the Engineer.

The quality of all seed will be based on the percentage of pure live seed, which will be computed by multiplying the percentage of purity by the percentage of germination and dividing the result by 100.

Seed shall have been approved by the North Carolina Department of Agriculture before being sown. No seed will be accepted with a date of test more than 8 months prior to the date of sowing, excluding the month in which the test was completed. Such testing, however, will not relieve the Contractor from responsibility for furnishing and sowing seed that meets these Specifications at the time of sowing. The Engineer may retest seed for germination after a 5 months storage period; at the beginning of each normal seeding season for the particular kind of seed involved; or at any time that the condition of the seed appears to have deteriorated.

When a low percentage of germination causes the quality of the seed to fall below the minimum pure live seed specified, the Contractor may elect, subject to the approval of the Engineer, to increase the rate of application sufficiently to obtain the minimum pure live seed content specified, provided that such an increase in the rate of application does not cause the quantity of noxious weed seed per acre or square yard, as the case may be, to exceed the quantity that would be allowable at the regular rate of application.

Furnish and deliver each of the species or varieties of seed in separate bags. If seed is to be mixed before sowing, perform such mixing in a commercial seed mixing machine or by equally thorough means after sampling and testing have been completed.

During handling and storing, care for the seed in such a manner that it will be protected from damage by heat, moisture, rodents, or other causes.

1060-5 MULCH FOR EROSION CONTROL

Mulch for erosion control shall consist of grain straw or other acceptable material, and be approved by the Engineer before being used. All mulch shall be reasonably free from mature seedbearing stalks, roots, or bulblets of Johnson Grass, Nutgrass, Sandbur, Wild Garlic, Wild Onion, , Crotalaria, and Witchweed, and free from an excessive amount of restricted noxious weeds as defined by the North Carolina Board of Agriculture at the time

of use of the mulch, and also there shall be compliance with all applicable State and Federal domestic plant quarantines. Loose and separate straw mulch that is matted or lumpy before being used.

Material for holding mulch in place shall be asphalt or other approved binding material.

1060-6 SPRIGS

Sprigs shall consist of freshly dug live stolons, or rhizomes of permanent grasses, a minimum of 2" in length, and be first class representatives of the required species or varieties specified in the specifications. The areas from which sprigs are to be obtained shall be free from Johnson Grass, Nutgrass, Sandbur, Wild Garlic, Wild Onion, Crotalaria, and Witchweed, and free from an excessive amount of restricted noxious weeds as defined by the North Carolina Board of Agriculture at the time of digging the sprigs, and also there shall be compliance with all applicable State and Federal domestic plant quarantines. The areas shall have been mowed and raked, burned off, or otherwise prepared in a manner acceptable to the engineer before digging of sprigs begins.

1060-7 SOD

Sod shall consist of a live, dense, well-rooted growth of permanent grasses, free from Johnson Grass, Nutgrass, Sandbur, Wild Garlic, Wild Onion, Crotalaria, and Witchweed, and free from an excessive amount of restricted noxious weeds as defined by the North Carolina Board of Agriculture at the time of cutting the sod, and also there shall be compliance with all applicable State and Federal domestic plant quarantines. Mow the area from which sod is to be obtained to a height of not more than 2”, and rake free of grass clippings and debris and otherwise prepared in a manner satisfactory to the Engineer before cutting of sod begins.

Cut the sod into rectangular sections of sizes convenient for handling without breaking or loss of soil. Cut it with a sod cutter or other acceptable means to a depth that will retain in the sod practically all of the dense root system of the grass.

During wet weather, allow the sod to dry sufficiently before lifting to prevent tearing during handling and placing, and during extremely dry weather water it before lifting if such watering is necessary to insure its vitality and to prevent loss of soil during handling.

1060-8 MATTING FOR EROSION CONTROL

(A) General

Matting for erosion control shall be excelsior matting or straw matting. Furnish a Type 3 Certification in accordance with Article 106-3 certifying that the matting meets the requirements of this article. Other acceptable material manufactured especially for erosion control may be used when approved by the Engineer in writing before being used. Matting for erosion control shall not be dyed, bleached, or otherwise treated in a manner that will result in toxicity to vegetation.

(B) Excelsior Matting

Excelsior matting shall consist of a machine produced mat of curled wood excelsior a minimum of 47" in width and weigh 0.975 pounds per square yard with a tolerance of plus or minus 10 percent. At least 80 percent of the individual excelsior fibers shall be 6" or more in length. Evenly distribute the excelsior fibers over the entire area of the blanket. Cover one side of the excelsior matting with an extruded plastic mesh. The mesh size for the plastic mesh shall be a maximum of 1" x 1".

(C) Straw Matting

Straw matting shall consist of a machine produced mat of 100% grain straw. The straw matting shall have a minimum width of 48" and a maximum width of 90" weighing a minimum of 0.50 pounds per square yard and a maximum of 0.75 pounds per square yard. Evenly distribute the straw over the entire area of the blanket. Cover one side of the blanket with photodegradable netting with a maximum mesh (netting) size of 0.75" by 0.75" sewn together with a degradable thread. The grain straw shall contain no weed seeds. Package each roll separately.

(D) Wire Staples

Staples shall be machine made of No. 11 gauge new steel wire formed into a "U" shape. The size when formed shall be not less than 6" in length with a throat of not less than 1" in width.

1060-9 WATER

Water used in the planting or care of vegetation shall meet the requirements of Class C fresh waters as defined in 15 NAC 2B.0200.

1060-10 PLANT MATERIALS - NURSERY GROWN

(A) General

Use all plants as called for by the contract.

Container grown plants may be used in lieu of balled and burlapped plants or bare rooted plants provided written approval for such use has been obtained from Engineer.

Grading of plants, size of root balls, and type and minimum dimensions of containers shall conform to the Specifications contained in the *American Standard for Nursery Stock*. Do not cut back plants from larger sizes to meet the sizes called for in the contract.

Botanical names referred to in the contract are taken from *Hortus Third, the Bailey Hortorium (1976 MacMillan Publishing Co., Inc.)*. All plants delivered shall be true to name. Each plant, or group of the same species, variety, and size of plant, shall be legibly tagged with the name and size of the plant.

All plants shall be first-class representatives of their species or varieties. The root system shall be vigorous and well developed. The branch systems shall be of normal

development, and free from disfiguring knots, sun scald injuries, abrasions of the bark, dead or dry wood, broken terminal growth, or other objectionable disfigurements. Trees shall have reasonably straight stems, and be well branched and symmetrical in accordance with their natural habits of growth.

All plants shall be free from plant diseases and insect pests. All shipments of plants shall comply with all nursery inspection and plant quarantine regulations of the states of origin and destination, as well as with Federal regulations governing interstate movement of nursery stock. Any nursery stock used on highway landscape projects shall be accompanied by a valid copy of a certificate of inspection, which has been granted by the North Carolina Department of Agriculture, Entomology Division. Fire Ant treatment certification, where applicable, is required.

When nursery stock from other states is used on projects in North Carolina, this stock shall be accompanied by a tag or certificate stating, in effect, that the nursery stock has been inspected and certified by an authorized official of the state of origin as apparently free from injurious plant pests.

All plant materials are subject to inspection at any time by the Engineer. Any such inspection before or during planting operations, however, will not be construed as final acceptance of the plants involved.

(B) Balled and Burlapped Plants

Dig plants, to be balled and burlapped (B&B) so as to retain a firm ball of soil and the plant's fibrous root system. The soil in the ball shall be the original and undisturbed soil in which the plant has been grown. Dig, wrap, transport, and handle the plant in such a manner that the soil in the ball will not become frozen, or loosened so as to cause stripping of the small feeding roots or movements of the soil away from contact with such roots.

(C) Container Grown Plants

Container grown plants shall be healthy, vigorous, well-rooted, and be established in the container in which they are delivered. These plants shall be in the container long enough for the fibrous roots to have developed so that the root mass will retain its shape and hold together when removed from the container. The container shall be sufficiently rigid to firmly hold the soil protecting the root mass during transporting, handling, and planting, and the soil shall not be allowed to become frozen.

(D) Bare Root Plants

Bare root plants shall have a heavy fibrous root system that has been developed by proper cultural treatment. Dig, package, transport, and handle bare root plants in a manner that will prevent injury to or drying out of the trunks, branches, or roots, or freezing of the roots. Bare root plants damaged through improper handling, damage due to freezing, drying out, etc. will result in rejection of material.

(E) Plant Substitution

No change in the Specifications (species, variety, size, caliper, furnish) will be made without written approval of the Engineer. Present all requests for substitutions in writing and include a listing of the sources that have been contacted in an attempt to secure specified plant material. Requests for substitutions shall include the botanical name, common name, cultivar, where applicable, size, caliper, and furnish description of the proposed substitute. No increase in compensation will be made to the Contractor as a result of the use of approved substitute plants. The Department reserves the right to locate specified plant material for the project when it has knowledge that specified material is available.

1060-11 MULCH FOR PLANTING

Use mulch for planting as specified in the specifications, shown on the plans, or approved by the Engineer. Mulch for planting shall not contain substances injurious to plants or which will inhibit normal development and growth of plants. Mulch for a project shall come from a single source, as approved by the Engineer, unless an additional source is submitted and approved prior to use.

1060-12 MATERIALS FOR STAKING OR GUYING

(A) Stakes

Use stakes made of cypress, cedar, oak, locust, or other acceptable wood free from defects that would impair the strength of the stake. Stakes shall be a minimum of 2" X 2" (nominal) inches square. Use stakes of the size and length as shown on the plans.

(B) Wire

Wire shall be new soft No. 14 gauge steel wire or as shown on the plans.

(C) Hose

Hose to be used with wire shall have a minimum inside diameter of 1/2". All hose shall be garden type hose composed of rubber and fabric, or as shown on the plans.

(D) Other

Other staking and guying materials may be used if a sample is submitted and approved by the Engineer prior to use.

1060-13 HERBICIDES

The herbicide to be used for a particular application shall be as specified in the specifications and/or approved by the Engineer.

Herbicides shall be properly labeled and registered with the United States Department of Agriculture and the North Carolina Department of Agriculture. A container shall contain only the herbicide that meets the analysis guaranteed on the label. Keep all herbicides in such original labeled containers until used.

Herbicide application can only be conducted by individuals who possess a pesticide license from the NC Department of Agriculture or individuals under their direction and who has read, understands, and follows the herbicide labeling before applying the product.

SECTION 1070
REINFORCING STEEL

1070-1 GENERAL

Store steel reinforcement on blocking a minimum of 12" above the ground and protect it at all times from damage; and when placing in the work make sure it is free from dirt, dust, loose mill scale, loose rust, paint, oil, or other foreign materials.

1070-2 DEFORMED STEEL BAR REINFORCEMENT FOR STRUCTURES

Supply deformed steel bar reinforcement conforming to the requirements of AASHTO M31 for Grade 60. Bend and cut during fabrication with tolerances in accordance with the *Manual of Standard Practice* published by the Concrete Reinforcing Steel Institute. Bend the bars cold to the details shown on the plans.

1070-3 COLD DRAWN STEEL WIRE AND WIRE FABRIC

Provide cold drawn steel wire for use as spirals or in fabricated form for the reinforcement of concrete meeting the requirements of AASHTO M32. Epoxy coat all spacers on spirals when the spirals are epoxy coated.

Use welded wire fabric conforming to AASHTO M55.

1070-4 REINFORCING STEEL BAR SUPPORTS

Make all wire bar supports of smooth cold drawn industrial quality basic wire having a minimum tensile strength of 65,000. When the legs of the bar supports are in contact with the forms, ensure that the entire leg of the bar support is stainless steel wire or a minimum thickness of 1/4" stainless steel at points of contact with the forms. Use stainless steel wire meeting the requirements of ASTM A493 except having a minimum chromium content of 16 percent and a minimum tensile strength of 95,000 psi. Ensure that wire sizes, height tolerance, and leg spacing for wire bar supports are in accordance with the requirements listed in the current *Manual of Standard Practice* published by the Concrete Reinforcing Steel Institute.

As an option to the stainless steel wire for the legs of bar supports at points of contact with the forms, provide legs of cold drawn steel wire plastic protected in accordance with the current *Manual of Standard Practice* published by the Concrete Reinforcing Steel Institute, except provide plastic protection by dipping or by premolded plastic tips. Do not use plastic legs molded to the top wire.

1070-5 PRESTRESSING STRAND

Use prestressing strands for use in prestressed concrete consisting of 7-wire strands, stress relieved after manufacture to remove internal stresses. Use the size and the grade of the strand as shown on the plans. Use strands conforming to the requirements of

AASHTO M203 except provide a specimen for test purposes, if required, from each reel of cable instead of each 20 ton production lot.

For precast prestressed deck panels, use 3/8” round seven-wire stress-relieved Grade 250 or 270 prestressing strands meeting the requirements of AASHTO M203.

Mark the outer layer of each reel pack of strand with a wide color band as follows: white for Grade 270 stress relieved strand, green for low relaxation strand, and a double marking of green and red for special low relaxation strand. In addition, attach a metal tag to each reel pack labeled in accordance with AASHTO M203.

1070-6 DOWELS AND TIE BARS FOR PORTLAND CEMENT CONCRETE PAVEMENT

Use smooth plain round steel dowel bars conforming to the requirements of AASHTO M31 Grade 60. Do not use dowel bars with burred ends. A tolerance of ±1/4" is permitted from the dowel length required by the plans. A straightness tolerance of 0.075" from a straight line is permitted.

Epoxy coat all dowel bars in accordance with AASHTO M284 and these provisions, with a coating thickness of 7 to 13 mils after curing. Coated bars will be taken by the Engineer from the production run on a random basis at the point of coating application for testing and evaluation. The Engineer determines the sampling and testing schedule for the number and frequency of tests for thickness of coating, adhesion of coating, and holidays. A minimum of one bar for each 20 coated is tested for holidays and coating thickness. Perform a minimum of 2 bend tests for each 8 hours of production coating or any fraction thereof for determining that adhesion and flexibility of the coating meets specification requirements. Payment is not made by the Department for coated bars selected for testing and evaluation purposes at the point of coating application. All coated bars are inspected at both the coating and fabrication shops. Furnish a Type 1 Certified Mill Test Report and attach it to a completed Department of Transportation reinforcing steel certification Form Number 913 for all coated reinforcing bars before cleaning and coating operations, of the time and location where the work is performed.

Use dowel assemblies for supporting dowel bars of rigid construction capable of holding the dowel bars in proper position during placing of concrete, and of such design to permit unrestricted movement of the pavement slab. Use wire for dowel assemblies meeting the requirements of AASHTO M32. Use a dowel assembly that holds the dowels in the required position within a tolerance of 1/4" in vertical and horizontal planes. Obtain written approval for the dowel assembly prior to use.

Coat dowel bars and the entire dowel assembly with an approved wax base coating. Apply the coating by dipping or spraying such that the wax coating on the dowel bars is of uniform thickness sufficient to allow pulling of the dowel from the concrete as provided in AASHTO T253 and M254. Furnish to the Department for testing 1 dowel basket assembly for each 200 assemblies incorporated into the project.

Use deformed tie bars conforming to the requirements of AASHTO M31 for Grade 40 or Grade 60.

1070-7 BLANK

1070-8 EPOXY COATED REINFORCING STEEL

(A) General

Coaters of epoxy coated reinforcing steel shall establish proof of their competency and responsibility in accordance with the Concrete Reinforcing Steel Institute's Fusion Bonded Epoxy Coating Applicator Plant Certification Program. Registration and certification of the plant or shop under the CRSI Program and submission of the valid annual certificate to the State Materials Engineer is required prior to beginning any coating. The same requirement applies to coaters subcontracting work from the coater directly employed by the contractor.

Obtain approval of each coater and/or fabricator of epoxy coated reinforcing steel prior to coating or fabricating bars. Approval is based upon: (a) the coating applicator and/or fabricator establishing and maintaining an effective quality control program and (b) the coating applicator having equipment for cleaning, coating, and/or fabricating that produces coated material conforming to these Specifications. Include in requests for approval a well defined quality control program and direct the requests to the State Materials Engineer. Before Department approval is issued, the condition of equipment for blast cleaning, coating and/or fabricating material is evaluated by the Engineer for determining the equipment capability of producing a coated product conforming to the Specifications. A list of Department approved epoxy coating and/or fabricating companies is available from the State Materials Engineer.

(B) Coating Materials

Obtain approval for the epoxy resin powder prior to use. A list of prequalified powder sources is available from the State Materials Engineer.

Submit prequalified products other than those now approved for use to the State Materials Engineer for approval. Requalify each product every 5 years and any time a change is made in the manufacturing process or chemical composition of the epoxy resin.

Use powdered resin of any color that provides contrast to the corroded or uncorroded surface of the steel. Provide material of the same quality as that used for prequalification tests and as represented by test reports forwarded to the State Materials Engineer.

Have the manufacturer of the epoxy resin supply to the coating applier information on the resin that is considered essential to the proper use and performance of the resin as a coating. Have the manufacturer of the resin furnish the coating applier a written certification signed by a responsible officer of the company that the material furnished for coating the reinforced steel is the same formulation as that for which test reports were previously submitted to the State Materials Engineer.

With each batch of coating material, furnish a written certification by the coating applier to the Engineer which properly identifies the batch number, material, quantity

represented, date of manufacture, name and address of manufacturer, and includes a statement that the supplied coating material is the same composition as that prequalified.

(C) Patching Material

Have the epoxy resin manufacturer supply a prequalified and approved patching or repair material that is compatible with the coating and inert in concrete. Ensure that the material is suitable for making repairs with a minimum dry film thickness of 6 mils from two coats on damaged areas of the coating. Ensure that each coater, fabricator, and contractor has a copy of the manufacturer's written instructions for application of the patching material and the instructions are closely followed during coating damage repairs.

Apply two coats of patch material where needed with the second coat applied only after the first coat dries to the touch. Do not apply any patch material when the surface temperature of the steel or the air temperature is below 40°F. Do not ship or place steel until the patch material is dry to the touch.

(D) Reinforcing Steel

Use coated steel reinforcing bars meeting the requirements of AASHTO M31, Grade 60 and free of contaminants such as oil, grease, and paint. Use bars free of surface irregularities that produce holidays in the coating. Have the coater visually inspect the bars to avoid coating bars containing such surface irregularities. If the coater fails to detect surface irregularities that produce holidays in the coating, patch the holidays with 6 mils of patching material as specified in Subarticle 1070-8(C) to avoid rejection of the bars.

(E) Surface Preparation of Bars

Subject coated reinforcing steel surfaces to a very thorough blast (near white) cleaning, prior to coating. Ensure that the appearance of the surface after cleaning corresponds to ASTM D2200 and the pictorial standards of SSPC Specifications VIS 1, degree of cleaning SSPC-SP10. Produce a suitable anchor pattern profile by the cleaning media. A target profile depth of approximately one third the coating thickness is considered a suitable anchor pattern.

Apply the coating to the cleaned surface as soon as possible after cleaning. Remove any formation of rust blooms on the cleaned bars by blast cleaning before application of the coating. However, never delay the coating more than 8 hours after cleaning unless otherwise permitted. Provide surface characteristics of the steel as described above at the time of coating.

After blast cleaning, and before application of the coating, remove all visible traces of grit and dust from the bars.

(F) Application of Coating

Apply the coating as an electrostatically charged dry powder sprayed into the grounded steel bar using an electrostatic spray gun. Apply the powder to either a hot or cold bar. Give the coated bar a thermal treatment as specified by the manufacturer

of the epoxy resin that provides a fully cured and bonded finish coating. Control temperature as recommended by the manufacturer of the coating material to ensure a workmanlike finish without blistering or other defects. Completely coat all bars, including bar ends, with epoxy resin powder to the minimum thickness specified in Subarticle 1070-8(G).

Run the production line at such a speed as to provide proper cure time prior to quench by air or water.

(G) Quality Control Requirements

For acceptance purposes, ensure that each recorded film thickness measurement is in the range of 7 to 12 mils after cure, with the entire area of a bar having a minimum coating thickness of 7 mils.

A single recorded coated reinforcing bar thickness measurement is the average of three individual readings obtained from three adjacent areas on the body of the bar (three adjacent areas between deformations). Obtain a minimum of five recorded measurements approximately evenly spaced along each side of the test bar (a minimum of ten recorded measurements per bar).

Have the coating applier visually inspect each coated bar after cure for continuity of coating and to ensure that the coating is free of holes, voids, contamination, cracks, and damaged areas discernible to the unaided eye. In addition, no more than an average of two holidays per linear foot of bar are permitted providing the total quantity of holidays does not exceed five in any linear foot. Bars that contain no more than five holidays in any linear foot of bar are acceptable provided any holidays in excess of two per linear foot are coated with 6 mils of patching material specified in Subarticle 1070-8(C). Retest the bars after patching to confirm that no more than 2 holidays exist in any linear foot of bar.

Have the coating applier evaluate the adhesion of the coating on a representative number of bars selected by the Engineer from each proposed shipment as specified in Subarticle 1070-8(L). No visible cracks or disbonding of the coating are allowed when tested in accordance with Subarticle 1070-8(H).

(H) Test Methods Required of the Coater

The thickness of the coating is measured on the body of the bar between the deformations or ribs. Conduct non-destructive coating thickness measurements using magnetic gages in accordance with ASTM G12, with the following additions applicable to commercially available pull-off gages, and to fixed probe gages with a magnetic field of vision not exceeding 0.015" of steel depth [0.015" is the minimum thickness of smooth steel to which adding more material does not change the zero reading].

Perform gage calibration with shims on a smooth, clean low-carbon steel plate (with minimum dimensions of 3" by 3 1/2", rather than on a cleaned reinforcing bar.

Determine a correction factor defining the effect of the bar preparation process as the difference between (a) the average of ten gage readings on a cleaned, but uncoated reinforcing bar of the size and lot coated, and (b) the average of five gage readings on

a smooth mild steel plate. This correction factor is then subtracted from all subsequent gage readings on coated bars.

Fixed probe gages are checked to ensure that the force generated by the springloaded probe housing is sufficient to ensure intimate contact between the probe tip and the coatings of the curved bar surface. If intimate contact does not result, remove the probe housing and utilize hand pressure to obtain valid indicated thickness readings.

As an option, use thumbwheel pulloff gages to provide valid thickness measurements on coated reinforcing bars with a deformation spacing which is less than the maximum outer dimensions of the probe housing. Position the base of the probe housing against the top of two adjacent deformations and extend the probe through the air gap to the body of the bar. Hold the gage very steady and apply continuous light downward pressure to the housing during the measurement.

Use a 67.5V holiday detector equipped with a holiday marker in accordance with the detector manufacturer's instructions. Maintain the detector in perfect working condition at all times during the bar coating process. Immediately after coating, route each bar through the detector for holiday detection. Bars containing more than five holidays in a linear foot of bar or averaging more than two holidays per foot of bar are either rejected or cleaned, recoated, and retested for holidays. A coating holiday for the purpose of this specification is defined as a discontinuity in the applied coating that occurs during the coating process that is detected either visually or electromechanically.

The adhesion of the coating is evaluated by bending production coated bars 120 degrees (after rebound) around a mandrel of specified size as prescribed in Table 1070-8(1). Conduct the bend test at a uniform rate and take up to 90 seconds to complete. Place the two longitudinal deformations in a plane perpendicular to the mandrel radius, and maintain the test specimen at thermal equilibrium between 68°F and 85°F. If the specimen for the adhesion of coating shows evidence of cracking or debonding of the coating, conduct two retests on random samples. If the results of both retests meet the specified requirements, the coated bars represented by the samples are acceptable.

TABLE 1070-8(1)
Bend Test Requirements

Bar No.	Mandrel Diameter, In.
3	3
4	4
5	5
6	6
7	7
8	8
9	9
10	10
11	11
14	17
18	23

The fracture or partial failure of the steel-reinforcing bar in the bend test for adhesion of coating is not considered as an adhesion failure of the coating. If failure of the bar occurs, test two check samples without bar failure.

Condition test bars at a temperature range of 68°F to 85°F. In cases of dispute, conduct tests at 73°F and 50% relative humidity in accordance with Recommended Practices ASTM D-3451.

(I) Handling and Identification

Provide padded contact areas for all systems for handling coated bars at the coating plant, fabricator, and project. Pad or suitably band all bundling bands to prevent damage to the coating. Lift all bundles of coated bars with a strong back, spreader bar, multiple supports or a platform bridge to prevent bar-to-bar abrasion from sag in the bundles of coated bars.

(J) Fabrication of Steel-Reinforcing Bars After Coating

Protect drive rolls and automatic kick-off levers on shear beds, and drive pins, center pins, and back-up barrels on benders with a suitable covering to minimize damage during the fabrication process. Note that these Specifications permit a maximum of 5 percent of the surface area of a bar to contain patching material. This includes patching due to damage to the coating by the coater, fabricator, transporter, and contractor.

Store coated bars as required by Subarticle 1070-8(M).

Have the fabricator maintain the identification of the coated bars, and assure that the coated, fabricated bars are identified with proper tags for final shipment to the job site.

Perform coating repairs as described in Subarticle 1070-8(K) with material specified in Subarticle 1070-8(C).

Flame cutting of coated bars to the required dimensions is not permitted. Maintain any mechanical device used for cutting the coated bars to required length in good working order to minimize damaging the coating in the vicinity of the cut ends. Repair coating damage in these areas as described in Subarticle 1070-8(K) with material specified in Subarticle 1070-8(C).

(K) Procedures for Repair of Coating

Repair all coating damage of the reinforcing bars with material described in Subarticle 1070-8(C) when coating bond loss and damage exist, including crushed coating and hairline cracking if bare metal is evident. When repair is required, clean and repair all damage. Remove crushed coating and loose or deleterious material. In areas where rust is present, remove it by wire brushing with a power tool to the surface finish specified in Subarticle 1070-8(E) prior to repair.

(L) Inspection by the Department:

Coated bars are inspected at both the coating and fabrication shops unless otherwise approved. The coater and/or fabricator is required to furnish mill test reports attached to a completed Department of Transportation Reinforcing Steel Certification Report (Form 913) for all coated reinforcing bars. Also include a completed Epoxy Coated Reinforcing Bar Inspection Report (Form 310) with each shipment. These certification forms are available from the State Materials Engineer. Do not epoxy coat, fabricate, or ship reinforcing steel to the project site without the approval of the Engineer.

Provide free entry to the plant and facilities of the coater and/or fabricator for the inspection of all manufacturing processes including but not limited to the cleaning, coating and fabrication of the ordered bars.

On a random basis, lengths of coated bars or fabricated bars are taken from the production run at the point of coating application for testing and evaluation.

All bar tests are made at the coating applicator and/or fabricator's plant, prior to shipment, unless otherwise approved. Have the coating applier and/or fabricator notify the State Materials Engineer five working days prior to the time the material is coated or fabricated. Do not ship bars until they are inspected and tagged by the Department.

The Engineer randomly selects three coated bars of each size from each proposed shipment to test for holidays, damage and coating thickness. If any bar fails to conform to these Specification requirements, six (6) samples are selected and tested. If these tests reveal that the coating conforms to Specification requirements the shipment is acceptable. If any of the second set of samples fail to conform to these Specifications the coater is required to test all bars of that size that are included in the shipment and re-submit the shipment to the Department for inspection. The Engineer selects from each proposed shipment 2 samples of each size bar for bend tests by the coater for determining that the adhesion and flexibility of the coating conforms to Subarticle 1070-8(H).

(M) Repairs to Coating Due to Loading, Transporting, and Handling

Transport the bundled bars from the coater or fabricator to the project site with padding, such as carpet padding or used carpet, placed over each bundle of steel upon which another bundle of steel is placed unless wooden spacers are placed between each bundle to prevent contact.

Load all bundles of bars horizontally for transporting. Transport the bars on a flatbed trailer. Do not allow the length of bars extending beyond the trailer bed to exceed 8 feet.

Repair coating damage due to handling and transporting or other causes with material specified in Subarticle 1070-8(C) and in accordance with Subarticle 1070-8(K).

(N) Rejection

Coated bars that do not meet the requirements of this Specification are rejected. At the Contractor's option, replace coated bars containing defects beyond the limits of these Specifications. Alternatively, strip the bars of coating, reclean, and recoat in accordance with the requirements of this Specification.

1070-9 SPIRAL COLUMN REINFORCING STEEL

Furnish spiral column reinforcing steel with the following areas and weights as required by the plans:

	Size	Area, in^2	Weight, lbs./ft
Plain Cold Drawn Wire	W 20	0.20	0.668
	W31	0.31	1.043
Deformed Cold Drawn Wire	D-20	0.20	0.680
	D-31	0.31	1.054
Plain or Deformed Bar	#4	0.20	0.668
	#5	0.31	1.043

Use cold drawn wire conforming to the requirements of AASHTO M32. Use plain or deformed bars conforming to the requirements of AASHTO M31 for Grade 60. Use deformed cold drawn wire conforming to the requirements of AASHTO M225.

The diameter of the spiral reinforcing steel is the outside to outside measurement of the bars or wire, with an allowance of 1/2" more or 1/2" less than the specified diameter as shown on the plans.

Furnish spirals with 11/2 extra turns at top and at bottom of the completed spiral cage. Where splicing of the spirals is necessary other than those shown on the plans, provide a minimum lap splice of 3 feet.

Do not weld on the spiral reinforcing.

When required by the plans, use epoxy coated spiral column reinforcing steel including spacers in accordance with Article 1070-8.

Use the minimum number of spiral spacers as shown on the plans. Ensure a minimum section modulus per spiral spacer of 0.030 in^3.

1070-10 MECHANICAL BUTT SPLICES

When called for by the contract or when directed by the Engineer, use a mechanical butt reinforcing steel splice from an approved source. Use a standard metal filled sleeve, cement mortar filled sleeve, threaded steel couplings, forged steel sleeve, cold-forged sleeve. An exothermic process whereby molten filler metal, contained by a high strength steel sleeve of larger inside diameter than the bars, is introduced into the annular space between the bars and the sleeve and also between the ends of the bars may also be used. Provide a splice that is capable of transferring at least 125% of the yield strength of the bars from one bar to the other by the mechanical strength of the splice components.

For splices not on the approved list, prior to use and as a condition of approval, assemble three test splices in the presence of the Engineer for each size of bar which is proposed for use on the project. Forward the test splices to the North Carolina Department of Transportation's Materials and Tests Unit in Raleigh, N.C. for testing and approval.

SECTION 1072
STRUCTURAL STEEL

1072-1 GENERAL

Furnish and fabricate all structural steel and related incidental materials including sign supports and high mount lighting standards and use materials in accordance with this section.

(A) Fabricator Qualification

Steel fabricators are required to establish proof of their competency and responsibility in accordance with the American Institute of Steel Construction's (AISC) Quality Certification Program in order to perform work for the project. Registration and certification of the plant or shop under the AISC program and submission of a valid certificate to the State Materials Engineer is required prior to beginning fabrication. Submit annually an endorsed copy to the State Materials Engineer for continued qualification. The same requirements apply to fabricators subcontracting work from the fabricator directly employed by the Contractor.

Employ fabricators of high mount lighting standards in excess of 80 feet in length, structural steel components of fender systems, retaining walls and noise walls, sign supports, sign structures, pot and expansion bearings, simple span rolled beams, including those requiring cover plates, solar array platforms and modular expansion joints that are AISC certified in Simple Steel Bridges. Employ fabricators of heat curved rolled beams, rolled beams for continuous spans, and plate girders that are AISC certified in Major Steel Bridges. Employ fabricators of fracture critical bridge beams and girders that also have a Fracture Critical Members Endorsement from AISC. Ensure that fabricators applying over 1500 square feet of coating have

a Sophisticated Paint System Endorsement from AISC or a Quality Procedure Three Certification from the Society of Protective Coatings.

(B) Office

Ensure that fabricators of main structural steel components of bridges provide an office area with an approximate floor space of 100 square feet, a desk or drafting table, 2 chairs, telephone, facilities for proper heating and cooling, telephone, separate dial-up or faster internet access and adequate lighting and located at the plant site for the exclusive use of the Engineer. Have fabricators of other structural steel items furnish reasonable work areas for the Engineer.

1072-2 STRUCTURAL STEEL OF FOREIGN ORIGIN

When electing to utilize major elements of structural steel that are manufactured outside the United States, furnish such materials only from those foreign manufacturers who establish, to the satisfaction of the Engineer, the adequacy of their in-plant quality control to give satisfactory assurance of their ability to furnish material uniformly and consistently in conformance with the Specifications. Major elements of structural steel are considered to be rolled shapes, plates for girder flange and web components or beam cover plates, and any other structural steel element not listed elsewhere as a minor element that is considered by the Engineer of sufficient importance to be included in this category.

Provide proof of adequacy and obtain approval before incorporating foreign manufactured major structural steel elements into the work. Establish proof by either (1) providing the Engineer with a detailed written certification by an established and approved Independent Testing and Inspection Laboratory or Agency showing evidence that the foreign manufacturer previously established in-plant quality control to give assurance of their ability to furnish material uniformly and consistently in conformance with the Specifications, or (2) a thorough in-plant inspection of the foreign manufacturer's facilities by the Engineer or his appointed representative.

Cover the cost of determining such adequacy, established either by detailed written evidence or a thorough in-plant inspection by the Engineer or his appointed representative. Make payment of all expenses incurred by the Engineer or his appointed representative in making such in-plant inspection to the N. C. Department of Transportation upon receipt of detailed billing prepared by the N. C. Department of Transportation.

Prior to fabrication of major elements of foreign produced structural steel, obtain all applicable certified mill test reports clearly identifiable to the lot of material by heat numbers and color coding and submit these reports for review, analysis, and acceptance.

The above requirements for submission and approval of certified mill test reports also apply to minor elements of foreign produced steel, except that a supplier's certification as to grade of steel is acceptable for steel which is difficult to identify on any mill test report. Ensure that the supplier's certification lists the elements covered by the certification and the pounds of steel required for each element. Minor elements are considered to be anchor bolts, pipe sleeves, masonry plates, sole plates, diaphragm tees, connector plates, web stiffener plates, and any other element not classified as a major element.

Deliver structural steel materials to the fabrication site and store a sufficient period of time to permit inspection, sampling, and testing as deemed necessary by the Engineer prior to fabrication. Make all pieces of all materials available for inspection, sampling, and testing.

1072-3 FABRICATION OF STRUCTURAL STEEL OUTSIDE CONTINENTAL LIMITS OF UNITED STATES

Notify the Engineer at the earliest possible date after award of the contract as to the proposed site of structural steel fabrication to allow the Engineer to make all necessary arrangements for structural steel fabrication inspection. When electing to have items of structural steel fabricated outside the continental limits of the United States, reimburse the Department for all costs connected with inspection of such fabrication, including necessary expenses for the Engineer or his representative to make an in-plant inspection of the fabrication facilities and to arrange for an inspection agency to perform the shop inspection of fabrication.

Fabrication inspection includes the determination before fabrication that the material furnished is tested and approved for the project, and checks of material sizes, fabrication details, welds, welding procedures, welders, girder fit-ups, all cleaning and painting of members, and paints to ascertain that requirements of the contract are met. A detailed description of all duties of a shop inspector is available upon request from the Materials and Tests Unit.

All correspondence, telephone conversation, and other communication from the Department, other than from the in-plant inspection representative, shall be with the Contractor and not with the foreign fabricator.

1072-4 SHAPES, PLATES, BARS, AND SHEETS

Use shapes, plates, bars, and sheets meeting the requirements of AASHTO M270 Grade 36 unless otherwise required by the contract. For painted beams or girders, use sheet material of 1/32" in thickness meeting the requirements of ASTM A366 or ASTM A569, and sheet material of 1/16" through 5/32" thickness meeting the requirements of ASTM A570 for Grades 36, 40, or 45. For unpainted beams or girders, use sheet material less than 3/16" thickness meeting the requirements of ASTM A606 for Type 4.

1072-5 BEARING PLATE ASSEMBLIES

Unless otherwise shown on the plans, galvanize steel bearing assemblies for both structural steel beams and girders and prestressed concrete girders. Galvanize anchor bolts, nuts, and washers in accordance with AASHTO M232. Cut pipe sleeves and collars from Schedule 40 PVC plastic pipe meeting the requirements of ASTM D1785.

Except for attachments of bearing plates to beams, fabricate and weld bearing plate assemblies before galvanizing the steel. Seal all joints of welded parts with weld material. After the fabrication of the bearing plate assembly is complete, galvanize the assembly in accordance with AASHTO M111. For prestressed concrete girders, clean welds made for attaching bearing plates to beams or girders and give them 2 coats of organic zinc repair paint having a minimum total coating thickness of 3 dry mils. For steel beams and girders, clean and paint in accordance with Article 442-10.

Repair galvanized surfaces that are abraded or damaged at any time after the application of the zinc coating by thoroughly wire brushing the damaged areas and removing all loose and cracked coating, after which give the cleaned area 2 coats of organic zinc repair paint having a minimum total coating thickness of 3 dry mils.

Use zinc rich paint meeting the requirements of Article 1080-9.

1072-6 ANCHOR BOLTS

Unless otherwise stated herein, use anchor bolts meeting the requirements of AASHTO M183 or ASTM A307 for Grade A.

Provide anchor bolts for bearing plate assemblies meeting the requirements of ASTM A449.

Swedge anchor bolts for a distance equal to the embedment length minus 3" measured from the embedded end.

Hot-dip galvanize anchor bolts, nuts and washers in accordance with AASHTO M232.

1072-7 HIGH STRENGTH BOLTS, NUTS, AND WASHERS

(A) General

Furnish all AASHTO M164 high-strength bolts, nuts and washers, including direct tension indicators, in accordance with the appropriate AASHTO or ASTM Materials Specifications as amended and revised herein.

Furnish the Engineer a copy of the manufacturer's test report for each component. Have the report indicate the testing date, the city and state where the components were manufactured, the lot number of the material represented, the rotational capacity tests lot number and the source identification marking used by the manufacturer of each component. On test reports for direct tension indicators, also include the tension load at which indicators are tested, gap clearance, nominal size and coating thickness.

Produce each permanent fastener component installed in a structure from domestically processed material containing the grade identification markings required by the applicable reference specification and the manufacturer's source identification marking. A copy of the source identification marking used by each manufacturer is on file with the Department's Materials and Tests Unit.

Obtaining permanent bolts, nuts, and washers in any one structure from different manufacturers is allowed provided:

(1) All bolts are produced by only one manufacturer.

(2) All nuts are produced by only one manufacturer.

(3) All washers are produced by only one manufacturer.

Have all fasteners used in a structure furnished by the fabricator of the steel. Require the fabricator to submit the fasteners for sampling and testing a minimum of 5 weeks before delivery to the project site. Sample and test each diameter and length of bolt, nut, and washer assembly as follows:

Lot Quantity	Number of Samples
0-800	3 Assemblies
801-8000	6 Assemblies
> 8000	9 Assemblies

Ship only those fasteners to the project that are sampled, tested, and approved. Protect the material from moisture during storage such that it does not contain any indication of rust at the time of installation. Ensure that each component contains a thin coat of lubricant at the time of installation.

When galvanized high strength bolts are required, use bolts, nuts, and washers meeting the requirements of Subarticle 1072-7(F).

When corrosion resistant structural steel is required by the plans, provide fasteners with atmospheric corrosion resistance and weathering characteristics comparable to that of the structural steel.

(B) Specifications

(1) Ensure that all bolts meet the requirements of AASHTO M164 and these Specifications.

(2) Ensure that all nuts meet the requirements of AASHTO M292 as applicable or AASHTO M291 and these Specifications. Completely coat each nut with a wax lubricant.

(3) Ensure that all washers meet the requirements of AASHTO and these Specifications.

(4) Ensure that all direct tension indicators meet the requirements of ASTM F959 and these Specifications.

(C) Manufacturing

(1) Bolts

(a) Hardness for bolt diameters 1/2" to 1" inclusive are noted below:

Bolt Size, In.	Hardness Number			
	Brinell		Rockwell C	
	Min.	Max.	Min.	Max.
1/2" to 1"	248	311	24	33

(2) Nuts

(a) Heat treat galvanized nuts to Grade 2H, DH, or DH3.

(b) Use plain (ungalvanized) nuts of Grades 2, C, D, or C3 with a minimum Rockwell hardness of 89 HRB (or Brinell hardness 180 HB), or heat treat to Grades 2H, DH, or DH3. (The hardness

requirements for Grades 2, C, D, and C3 exceed the current AASHTO/ASTM requirements).

(c) Tap oversize galvanized nuts the minimum amount required by AASHTO M291. Overtap the nut such that the nut assembles freely on the bolt in the coated condition and meets mechanical requirements of AASHTO M291 and the rotational-capacity test herein.

(3) **Marking** Mark all bolts, nuts and washers in accordance with the appropriate AASHTO/ASTM Specifications.

(4) **Direct Tension Indicators**

(a) For Type 3 high strength bolts, mechanically galvanize direct tension indicators to AASHTO M298 Class 50, and then apply baked epoxy to a thickness of 1 mil minimum. Direct tension indicators need not be mechanically galvanized or epoxy coated if they are made from material conforming to the requirements applicable to AASHTO M164, Type 3 bolts.

(b) For plain Type 1 high strength bolts, provide direct tension indicators that are plain or mechanically galvanized to AASHTO M298 Class 50.

(c) For galvanized Type 1 high strength bolts, mechanically galvanize direct tension indicators to AASHTO M298 Class 50.

(D) **Testing**

(1) Bolts

(a) Proof load tests (ASTM F606 Method 1) are required at the minimum frequency as specified in AASHTO M164 Paragraph 9.2.4.

(b) Wedge tests on full size bolts (ASTM F606 Paragraph 3.5) are required. If bolts are galvanized, perform the tests after galvanizing. Test at a minimum frequency as specified in AASHTO M164 Paragraph 9.2.4.

(c) If galvanized bolts are supplied, measure the thickness of the zinc coating. Take measurements on the wrench flats or top of bolt head.

(2) Nuts

(a) Proof load tests (ASTM F606 Paragraph 4.2) are required at the minimum frequency of as specified in AASHTO M291 Paragraph 9.3 or AASHTO M292 Paragraph 7.1.2.1. If nuts are galvanized, perform the tests after galvanizing, overtapping and lubricating.

(b) If galvanized nuts are supplied, measure the thickness of the zinc coating. Take measurements on the wrench flats.

(3) Washers

(a) If galvanized washers are supplied, perform hardness testing after galvanizing.

(b) Remove the coating prior to taking hardness measurements.

(c) If galvanized washers are supplied, measure the thickness of the zinc coating.

(d) Test direct tension indicators in accordance with ASTM F959.

(4) Assemblies

Rotational-capacity tests are required. Have the manufacturer or distributor perform such tests on all black or galvanized (after galvanizing) bolt, nut and washer assemblies prior to shipping. Washers are required as part of the test.

The following applies:

(a) Except as modified herein, perform the rotational-capacity test in accordance with the requirements of AASHTO M164.

(b) Test each combination of bolt production lot, nut lot and washer lot as an assembly. Where washers are not required by the installation procedures, do not include in the lot identification.

(c) Assign a rotational-capacity lot number to each combination of lots tested.

(d) The minimum frequency of testing is two assemblies per rotational-capacity lot.

(e) Assemble the bolt, nut and washer assembly in a Skidmore-Wilhelm Calibrator or an acceptable equivalent device (This requirement supersedes the current AASHTO M164 requirement to perform the test in a steel joint). For short bolts that are too short for assembly in the Skidmore-Wilhelm Calibrator, see Subarticle 1072-7(D)(4)(i).

(f) The minimum rotation, from a snug tight condition (10% of the specified proof load), is: 240 degrees (2/3 turn) for bolt lengths less than 4 diameters; 360 degrees (1 turn) for bolt lengths greater than 4 diameters and less than 8 diameters; 480 degrees (1 1/3 turn) for bolt lengths greater than 8 diameters.

(g) These values differ from the AASHTO M164 Table 8 Specifications.

Achieve tension at the above rotation equal to or greater than 1.15 times the required installation tension. The installation tension and the tension for the turn test are shown below.

Diameter, In.	**1/2**	**5/8**	**3/4**	**7/8**	**1**	**1 1/8**	**1 1/4**	**1 3/8**	**1 1/2**
Req. Installation									
Tension, kips	12	19	18	39	51	56	71	85	103
Turn Test									
Tension, kips	14	22	32	45	59	64	82	98	118

(i) After the required installation tension listed above is exceeded, one reading of tension and torque is taken and recorded. The torque value shall conform to the following:

Torque - less than or equal to 0.25 PD

Where

Torque = measured torque in foot-pounds

P = measured bolt tension in pounds

D = bolt diameter in feet

For bolts that are too short to test in a Skidmore-Wilhelm Calibrator, test in a steel joint. The tension requirement of Section (D)(4)(h) is computed using a value of P equal to the turn test tension shown in the Table in Section (D)(4)(h).

(5) Reporting

(a) Record the results of all tests (including zinc coating thickness) required herein and in the appropriate AASHTO specifications on the appropriate document.

(b) Report the location where tests are performed and date of tests on the appropriate document.

(6) Witnessing

Witness of the test by an inspection agency is not required; however, have the manufacturer or distributor performing the tests certify that the recorded results are accurate.

(7) Documentation

(a) Mill Test Report(s) (MTR)

(i) Furnish MTR for all mill steel used in the manufacture of the bolts, nuts, or washers.

(ii) Indicate in the MTR the place where the material was melted and manufactured, the lot number of the material represented and the source identification used by the manufacturer.

(b) Manufacturer Certified Test Report(s) (MCTR)

(i) Have the manufacturer of the bolts, nuts and washers furnish test reports (MCTR) for the item furnished.

(ii) Include in each MCTR the relevant information required in accordance with Section (D)(5).

(iii) Have the manufacturer performing the rotational-capacity test include on the MCTR:

a. The lot number of each of the items tested.
b. The rotational-capacity lot number as required in Subarticle 1072-7(D)(4)(c).
c. The results of the tests required in Subarticle 1072-7(D)(4).

d. The pertinent information required in Subarticle 1072-7(D)(5)(b).

e. A statement that the MCTR for the items are in conformance to this Specification and the appropriate AASHTO specifications.

f. The location where the bolt assembly components were manufactured.

(c) Distributor Certified Test Report(s) (DCTR)

(i) Ensure that the DCTR includes MCTR above for the various bolt assembly components.

(ii) Have the rotational-capacity test performed by a distributor or a manufacturer and reported on the DCTR.

(iii) Include in the DCTR the results of the tests required in Subarticle 1072-7(D)(4).

(iv) Include in the DCTR the pertinent information required in Subarticle 1072-7(D)(5)

(v) Include in the DCTR the rotational-capacity lot number as required in Subarticle 1072-7(D)(4)(c).

(vi) Ensure that the DCTR certifies that the MCTR are in conformance to this Specification and the appropriate AASHTO specifications.

(E) Shipping

(1) Ship bolts, nuts and washers (where required) from each rotational - capacity lot in the same container. If there is only one production lot number for each size of nut and washer, shipping of the nuts and washers in separate containers is allowed. Permanently mark each container on the side with the rotational-capacity lot number such that identification is possible at any stage prior to installation.

(2) Provide the appropriate MTR and MCTR or DCTR to the contractor or owner as required by the contract.

TABLE 1072-1
HIGH STRENGTH BOLTS BOLT AND NUT DIMENSIONS

Nominal Bolt Size (D)	Bolt Dimensions, In Inches Heavy Hexagon Structural Bolts			Nut Dimensions, In Inches Semi-Finished Heavy Hexagon Nuts	
	Width Across Flats (F)	Height (H)	Thread Length (T)	Width Across Flats (W)	Height (H)
1/2	7/8	5/16	1	7/8	31/64
5/8	1 1/16	25/64	1 1/4	1 1/16	39/64
3/4	1 1/4	15/32	1 3/8	1 1/4	47/64
7/8	1 7/16	35/64	1 1/2	1 7/16	55/64
1	1 5/8	39/64	1 3/4	1 5/8	63/64
1 1/8	1 13/16	11/16	2	1 13/16	1 7/64
1 1/4	2	25/32	2	2	1 7/32
1 3/8	2 3/16	27/32	2 1/4	2 3/16	1 11/32
1 1/2	2 3/8	15/16	2 1/4	2 3/8	1 15/32

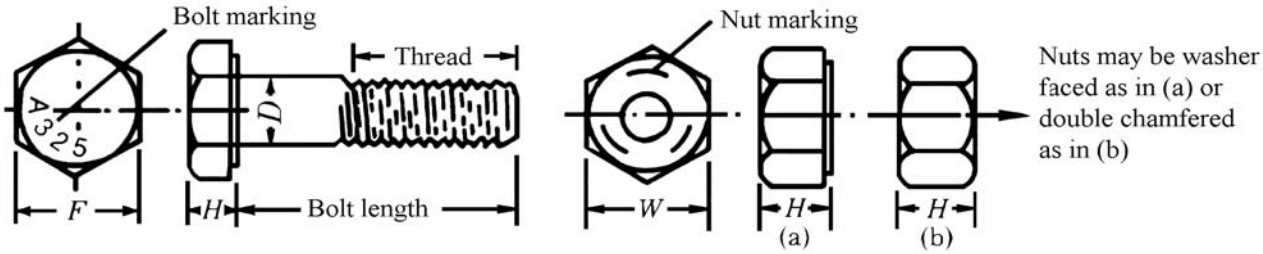

NOTE: Bolt and nut marking varies. See Subarticle 1072-7(B).

TABLE 1072-2
HIGH STRENGTH BOLTS
WASHER DIMENSIONS[a]

	Circular Washers				Square or Rectangular Beveled Washers for American Standard Beams and Channels		
Bolt Size	Nominal Outside	Nominal Diameter	Thickness		Minimum Side	Mean	Slope of Taper In
D	Diameter	of Hole	Min.	Max.	Dimension	Thickness	Thickness
1/2	1 1/16	17/32	.097	.177	1 3/4	5/16	1:6
5/8	1 5/16	11/16	.122	.177	1 3/4	5/16	1:6
3/4	1 15/32	13/16	.122	.177	1 3/4	5/16	1:6
7/8	1 3/4	15/16	.136	.177	1 3/4	5/16	1:6
1	2	1 1/8	.136	.177	1 3/4	5/16	1:6
1 1/8	2 1/4	1 1/4	.136	.177	2 1/4	5/16	1:6
1 1/4	2 1/2	1 3/8	.136	.177	2 1/4	5/16	1:6
1 3/8	2 3/4	1 1/2	.136	.177	2 1/4	5/16	1:6
1 1/2	3	1 5/8	.136	.177	2 1/4	5/16	1:6
1 3/4	3 3/8	1 7/8	.178[b]	.28[b]	--	--	--
2	3-3/4	2-1/8	.178[b]	.28[b]	--	--	--
Over 2 to 4 Incl.	2D-1/2	D+1/8	.24[c]	.34[c]	--	--	--

[a] Dimensions in inches

[b] 3/16 in. nominal

[c] 1/4 in. nominal

(F) Galvanized High Strength Bolts, Nuts, and Washers

Use galvanized high strength bolts, nuts, and washers meeting all other requirements of this subarticle except as follows:

(1) Use Type 1 bolts.

(2) Quench and temper washers.

(3) Mechanically galvanize in accordance with the requirements of AASHTO M232 Class C.

(4) Ship galvanized bolts and nuts in the same container.

(5) Use organic zinc repair paint for touch-up of galvanized surfaces meeting the requirements of Article 1080-9.

(6) Include in manufacturer's test reports results of the zinc coating thickness measurements.

(7) Have each galvanized nut coated with a wax lubricant with a color contrast to that of the zinc coating.

1072-8 WELDED STUD SHEAR CONNECTORS

Use Type B shear studs as defined by the current edition of the ANSI/AWS/AASHTO Bridge Welding Code D1.5.

Use and install welded stud shear connectors meeting the requirements of Article 1072-20. Ensure that shear studs and the areas of beams, girders or other structural steel to which the studs are welded are free of rust, rust pits, oil, grease, moisture, paint, galvanizing, loose mill scale or other deleterious matter which adversely affects the welding operation. Apply shear studs on steel with tightly adhering mill scale as determined by the Engineer provided acceptable results are achieved and the installed studs meet the testing requirements of the Bridge Welding Code.

1072-9 INSPECTION

(A) General

Give the Materials and Tests Unit 72 hours notice for in-state producers and 192 hours notice for producers out-of-state prior to beginning work in the shop. Do not manufacture or fabricate any material, other than stock items, before the Materials and Tests Unit is notified and the final shop drawings are reviewed, accepted and returned to the fabricator.

The contractor/fabricator shall be responsible for and shall be required to perform all quality control procedures and nondestructive testing in accordance with the Bridge Welding Code and as required by the Contract documents. Perform all quality control procedures and nondestructive testing in the presence of the Department's inspector unless otherwise approved by the Department's inspector. Obtain approval for all quality control inspectors from the Department's inspector and ensure their qualification in accordance with the Bridge Welding Code. Maintain all Quality Control Reports as required by the Bridge Welding Code, including but not limited to visual and nondestructive testing reports and all phases of coating application inspection. Provide copies of all Quality Control Reports, including all radiographic films, to the Department inspector upon request. These copies become the property of the Department. No separate payment is made for this inspection and testing. The entire cost of this work is included in the unit contract price for the structural steel item(s) involved.

Furnish facilities for the inspection of material and work in the mill and shop, and allow the inspectors free access to the necessary parts of the mill or shop. Do not ship any member or component of the structural steel from the shop to the job site prior to approval by the Department's inspector. Such approval is stamped on the member or appropriate container by the Department's inspector.

Furnish the Engineer with as many copies of mill orders and shipping statements as directed. The acceptance of any material or finished member by the Department's inspector is not a bar to their subsequent rejection, if found defective. Replace rejected material and correct rejected work promptly and satisfactorily.

(B) Shop and Mill Inspection

Shop inspection is performed on all structural steel used on any project. Mill inspection of structural steel is performed when so noted on the plans or in the Specifications. Furnish complete certified mill test reports for all structural steel used except that a Type 6 supplier's certification as to grade of steel used is acceptable for small amounts of structural steel items which are furnished from the supplier's stock and which are difficult to identify on any mill test report.

Show in the supplier's certification the items fabricated from stock material and the pounds of steel required for each item. A supplier's certification represents only anchor bolts, pipe sleeves, masonry plates, sole plates, diaphragm tees, connector plates, and web stiffener plates. Represent all other items required for a structure by certified mill test reports as specified above.

Indicate in the complete certified mill test reports the pounds of steel and the item or items they represent and show heat number of steel, mechanical tests, chemical analyses, Department's project number, station number, the ASTM or AASHTO specification to which the material conforms, and a signed statement certifying where the steel was melted and manufactured.

Forward to the Materials and Tests Unit a letter which states by station the items and pounds of steel that are represented by a supplier's certification and those represented by certified mill test reports identifying the beam and/or plate material for each main member.

The Department reserves the right to select any item for test. Bear any expense of obtaining the sample. The tests are performed at the Department's expense.

(C) Sampling Structural Steel

Furnish samples of structural steel at the beginning of fabrication when random sampling is required.

Furnish one sample 2 1/2" x 24" for each grade of steel used on a project. If more than 10 heat numbers are involved in any grade of steel, 2 samples of that grade are required.

Take all samples at the location and in the manner directed by an authorized representative of the Engineer. Furnish the necessary personnel and equipment for obtaining samples and be responsible for providing a smooth finish to the areas from which the samples are taken.

(D) Charpy V-Notch Tests

Furnish all structural steel for main beam and girder members (for girder members see plans) and for diaphragms and crossframes connecting horizontally curved members meeting the longitudinal Charpy V-Notch Tests specified in the supplementary requirements in AASHTO M270 for zone 1. Unless otherwise noted on the plans, mark and test the materials as non-fracture critical. Sample and test in accordance with AASHTO T243 and use the (H) frequency of heat testing. Use the grade or grades of structural steel required in the plans. Obtain and submit certified

mill test reports to the Materials and Tests Unit to show the results of each test required by this Specification.

Material failing to meet the qualification requirements outlined above is unacceptable for use on the project.

1072-10 WORKING DRAWINGS

Submit prints of checked structural steel shop drawings and changes thereto, including shipping diagrams, for review, comments, acceptance and distribution as follows:

(A) Submit 2 sets for review, comments, and acceptance on all steel structures. After review, comments, and acceptance, submit 7 sets for distribution.

(B) Submit 5 sets for review, comments, and acceptance for all bridges carrying railroad traffic, and after acceptance submit 9 sets for distribution.

(C) Furnish any additional sets requested by the Engineer or for his use, review, comments, acceptance and/or distribution.

Shop drawings are not checked by the Engineer except to ascertain general compliance with the design and the Specifications. Thoroughly check all shop drawings in all respects. Review, comments, and acceptance of shop drawings by the Engineer is not considered as relieving the Contractor of his responsibility for the accuracy of his drawings, or for the fit of all shop and field connections and anchors.

The maximum size of prints for shop drawings is 22" x 36", including borders which are at least 1" at the left edge of the sheet. Provide shop drawings on any medium provided they are legible and are reproducible. Upon completion of the project, furnish to the Engineer one complete set of reproducible shop drawings that represent the as built condition of the structural steel including all approved changes if any. Supply drawings that are 22" x 36". These drawings will become the property of the Department.

Changes on shop drawings after acceptance and/or distribution are subject to the approval of the Engineer. Furnish a record of such changes.

Make substitution of sections different from those on the structure plans only when approved in writing.

1072-11 HANDLING AND STORING MATERIALS

Load, transport, unload and store structural material so that the metal is kept clean and free from damage. Repair any coating damage. Do not use chains, cables, or hooks that damage or scar the material. Repair all materials which are scarred or damaged and inspect at the fabricators expense as deemed necessary by the Engineer.

Use lifting equipment and rigging equipment with adequate capacity to handle the material at all times. Do not bend, twist, damage, or excessively stress any materials. Operate and maintain all lifting equipment in a safe manner and in accordance with the manufacturer's directions.

When lifting main structural steel members, the use of spreader bars is preferred. Avoid one-point pick-ups if possible. Do not use one point pick-ups on members over 50 feet in

length. Use two point pick-ups so that the amount of overhang and the distance between hooks does not exceed the distances as noted in the following table:

	BEAM SIZE			
	30" or Less	33" WF	36" WF	Plate Girders
Distance Between Hooks (LF) Max	74'	80'	85'	100'
Overhang (LF) Max	25'	28'	30'	35'

Store structural material, either plain or fabricated, above the ground upon platforms, skids, or other supports, keep free from dirt, grease, vegetation, and other foreign matter, and protect as far as practicable from corrosion.

Keep material clean and properly drained. Transport and store girders and beams with the web in the vertical plane and the top flange up. Request permission in writing and await approval to invert haunched girders and beams for transport for safety reasons. Use extreme care in turn-over operations to prevent excessive bending stresses in the edge of flanges. Support long members on blocking placed near enough together to prevent damage from deflection.

Do not use any beam, girder, diaphragm, cross frame or other material, in any stage of fabrication that will be permanently incorporated into the finished structure as a workbench, lifting device, dunnage or for any purpose for which it was not specifically intended.

1072-12 STRAIGHTNESS, CAMBER, AND DIMENSIONAL TOLERANCES

(A) General

Ensure that rolled material, before being laid out or fabricated, is straight. If straightening is necessary, use methods that do not damage the metal. Kinks or sharp bends are cause for rejection of the material.

Ensure that heat straightened or heat cambered parts are substantially free from external forces, except those resulting from mechanical means used in conjunction with the application of heat.

After heating, allow the metal to cool without artificial cooling down to 600°F. Below 600°F, only dry compressed air is permitted to artificially cool steels having minimum yield strength greater than 36,000 psi as indicated by a mill test report.

(B) Straightening

Straighten distorted members and bent material by mechanical means or, if approved, by the carefully planned and supervised application of a limited amount of localized heat. Do not allow the temperature of the heated area to exceed 1200°F as controlled by temperature indicating crayons or other approved methods.

Following the straightening of a bend or buckle, free the surface of the metal from evidence of fracture as indicated by visual inspection or, if directed, by appropriate nondestructive testing.

Shop straighten the bottom flanges of steel beams or girders at bearings as necessary to provide uniform contact between the flanges and the bearings.

(C) Camber

Show the required camber on the drawings.

Make adequate provision in the fabrication of structural members to compensate for change of camber due to welding of the shear connectors and other fabrication work.

Fabricate camber into the members on built-up plate girders and trusses. Where camber is required on rolled sections, induce it by heat cambering, except that for rolled sections within the depth, length, and camber ordinate range shown in Table 1072-3, induce camber by cold cambering or "gagging" at the mill or in the shop provided approval procedures for cold cambering are employed.

Attach cover plates on rolled sections after cambering.

Where reverse curvature is required in a single rolled shape, induce it by heat cambering.

Show camber diagrams showing the required offset at each tenth point of the span and at any web splice or field splice location and blocking diagrams on the shop drawings. Show additional points if desired by the fabricator. Ensure that the beams, girders, or other members with field splices meet all of the blocking ordinates without inducing stress into the members.

Following cambering or camber correction, correct evidence of fracture indicated by visual inspection or, if directed, by appropriate nondestructive testing.

Show camber and blocking diagrams on the shop drawings. Shop assemble continuous beams meeting all the blocking ordinates without inducing stress into the members.

TABLE 1072-3
ACCEPTABLE COLD CAMBER FOR ROLLED SECTIONS

	Section Designation and Nominal Depth	
Beam Length, Feet	W Shapes 14" to 21" Inclusive S Shapes 12" and Over	W Shapes 24" and Over
Over 30 through 42	3/4" to 2 1/2" inclusive	1" to 2" inclusive
Over 42 through 52	1" to 3" inclusive	1" to 3" inclusive
Over 52 through 65	2" to 4" inclusive	2" to 4" inclusive
Over 65 through 85	2 1/2" to 5" inclusive	3" to 5" inclusive
Over 85 through 100	As directed by the Engineer	3" to 6" inclusive

(D) Heat Cambering of Rolled Beams and Welded Plate Girders

(1) General

Where heat cambering is used, only Deep-Vee heating is permitted. Perform Deep-Vee heating by the carefully planned and supervised application of a limited amount of localized heat.

When minor corrections in camber are required, use small localized heats limited to the flange material. Perform major corrections in camber by Deep-Vee heating to prevent web distortion.

Begin heating at the apex of the heating pattern and progress slowly towards the base of the pattern as each area is brought up to temperature as stated in Subarticle 1072-12(D)(5). Do not return the heating torch toward the apex of the heating triangle after heating has progressed towards the base.

Do not progress the heating torches toward the base of the heating pattern until the apex of the pattern is brought up to the specified temperature. Continue heating to successive areas until the base of the triangular heating pattern is brought up to the required temperature across the full width of the flange.

(2) Heat Cambering of Rolled Beams

Heat cambering of rolled beams is allowed to provide the required vertical curvature. Space triangular heating patterns throughout the length of the member to provide the required curvature. Locate the apex of the heating triangle at a point not less than 75 percent of the depth of the member measured from the flange that is concave after cambering. Limit the total included angle of the heating pattern to 20 degrees.

Weld all detail material such as connection plates, bearing stiffeners, and gusset plates attached to the member to the rolled beam after the beam is cambered as required.

(3) Heat Cambering of Welded Plate Girders

Heat cambering of welded plate girders is only permitted when approved in writing as a necessary repair procedure for plate girders rejected for camber deviation.

When it is necessary to correct camber deviation in welded plate girders, heating is permitted in Deep-Vee heating patterns centered on intermediate stiffeners and connection plates. Where necessary, add stiffeners for this purpose if approved. Locate the apex of the heating pattern not less than 3/4 of the depth of the member from the flange that is shortened after cooling. The maximum included angle of the heating pattern is 10 degrees. The maximum width of the base of the heating pattern is 10". Where shallow members or thin webs prescribe heating patterns with a width substantially less than 10" at the junction of the web to flange, extend the heating pattern in the flange at that location beyond the limits of the heating pattern in the web

by a maximum of 1" provided the total width of pattern in the flange does not exceed the 10" limit stated above.

(4) Support of Members for Heat Cambering

Heat camber members with the web vertical and supports spaced to take the maximum advantage of dead load in the member before applying heat. Have all supports approved by the Inspector before beginning work.

Do not place any combination of support system or external load on the member that causes a compressive stress in the flange to exceed 20,000 psi before heating for AASHTO M270 Grade 36, Grade 50 and Grade 50W steels.

(5) Heating Process and Equipment

Heat using large, approximately 1" diameter, multi-orifice (rosebud) heating torches operating on approximately 25 psi thermal gas and 125 psi oxygen.

The torches and tips used are subject to approval. Choose torches and tips that promote heating efficiency and prevent unnecessary distortion.

Confine heating to the patterns described herein and conduct so as to bring the steel within the planned pattern to a temperature between 1100 and 1200° F as rapidly as possible without overheating the steel.

Any heating procedure which causes a portion of the steel to exceed a temperature greater than 1,200 °F is considered destructive heating and is automatically cause for rejection of the steel. Steel rejected for destructive heating is investigated for re-acceptance, repair, or replacement if allowed by the Engineer. Bear the cost of such tests and any necessary repair or replacement.

(6) Heat Measurement

Specified temperatures are checked using portable digital pyrometers.

(E) Heat Curving Girders

(1) Type of Heating

With approval, use continuous or V-type heating methods to curve girders. For the continuous method, simultaneously heat a strip along the edge of the top and bottom flanges that is of sufficient width and temperature to obtain the required curvature. For V-type heating, heat the top and bottom flanges simultaneously in truncated triangular or wedge-shaped areas. Position the areas with their base along the flange edge and spaced at regular intervals along each flange. Set the spacing and temperatures to approximate the required curvature by a series of short chords. Heat along the top and bottom flanges at approximately the same rate.

For V-type heating, terminate the apex of the truncated triangular area applied to the inside flange surface just before the juncture of the web and flange. To avoid web distortion, make certain that heat is not applied directly to the web when heating the inside flange surfaces (the surfaces that intersect the web).

Extend the apex of the truncated triangular heating pattern applied to the outside flange surface to the juncture of the flange and web. Use an included angle of approximately 15 to 30 degrees in the truncated triangular pattern, but do not allow the base of the triangle to exceed 10 ". Vary the patterns prescribed above only with the Engineer's approval.

For both types of heating, heat the flange edges that will be on the inside of the horizontal curve after cooling. Concurrently heat both inside and outside flange surfaces for flange thickness 1¼ inches and greater. Adhere to the temperature requirements presented below.

(2) Temperature

Conduct the heat-curving operation so that the temperature of the steel never exceeds 1150°F as measured by temperature indicating crayons or other suitable means. Do not artificially cool the girder until it naturally cools to 600°F; Use dry compressed air to artificially cool the girder.

(3) Position for Heating

Heat-curving the girder with the web in either a vertical or horizontal position is permitted. When curved in the vertical position, brace or support the girder so that the tendency of the girder to deflect laterally during the heat-curving process does not cause the girder to overturn.

When curved in the horizontal position, support the girder near its ends and at intermediate points, if required, to obtain a uniform curvature. Do not allow the bending stress in the flanges to exceed 27,000 psi. To prevent a sudden sag due to plastic flange buckling when the girder is positioned horizontally for heating, place intermediate safety catch blocks at the midlength of the girder within 2 inches of the flanges at all times during the heating process.

(4) Sequence of Operations

Conduct the heat-curving operation either before or after completing all the required welding of transverse intermediate stiffeners to the web. However, unless provisions are made for shrinkage, position and attach connection plates and bearing stiffeners after heat-curving. In any event, weld the stiffeners, connection plates, and bearing stiffeners to the girder flanges after the member is curved. If longitudinal stiffeners are required, heat-curve or oxygen-cut these stiffeners separately prior to welding to the curved girder.

(5) Camber

Camber the girders before heat-curving. Cut the web to the prescribed camber allowing for shrinkage due to cutting welding, and heat-curving. If approved, a carefully supervised application of heat is permitted to correct moderate deviations from the specified camber.

(6) Measurement of Curvature and Camber

Horizontal curvature and vertical camber is measured for final acceptance after all welding and heating operations are complete and the flanges have cooled to a uniform temperature. Horizontal curvature is checked with the web in the vertical position by measuring offsets from a string line or wire attached to both flanges or by using other suitable means. Camber is checked with the web in the horizontal position. Camber the girder so that it meets the horizontal and vertical curvature ordinates without inducing stress into the girders by mechanical force.

Compensate for loss of camber in the heat-curved girders as residual stresses dissipate during service life of the structure. This anticipated loss of camber is computed in accordance with the *AASHTO Standard Specifications for Highway Bridges* as shown on the plans.

Clearly define the deviation in accordance with Subarticle 1072-12(D) from curvature that should be reasonably close to what AWS allows which is 1/8" per 10 foot length.

(7) Procedure Specification and Shop Drawings

Submit structural steel shop drawings, including a detailed written procedure specification for heat curving the girders, supplemented by calculations and sketches, for review, comments and acceptance. On the shop drawings, indicate the type, location, and spacing of heat sectors, if used, supports, and catch blocking for each field section of girders. Also, include suitable blocking diagrams for measuring horizontal curvature similar to those usually prepared for camber and vertical curvature.

(F) Camber Measurement

At the time of acceptance at the shop and after erection, ensure that all stringers and girders for bridges meet the required camber values within the tolerances specified in Subarticle 1072-12(F). Follow the procedure for measuring camber as outlined below:

(1) Assemble the member at the shop as specified in Article 1072-21 and measure with the member lying on its side.

(2) Camber repairs are only allowed when approved by the Engineer. Camber deviation is judged irreparable if corrective measures in the shop produce web buckling in excess of the specified tolerance, in which case the member is rejected.

(3) The final camber measurement is made by the Engineer in the field after erection. At the time of this measurement, ensure that the members have all of the specified camber less the dead load deflection of the steel as specified in Subarticle 1072-12(F).

(G) Dimensional Tolerances

Ensure that dimensions of all material covered by Section 1072 conform to ASTM A6 when received at the fabrication shop. Fabricate member dimensions conforming to this subarticle whether designated to be straight, cambered, or curved and regardless of whether curvature is heat-induced (when so permitted). Dimensional tolerances not listed in this subarticle shall be as specified by the Bridge Welding Code as defined in Article 1072-20 and apply to rolled shapes where applicable as well as to welded members.

Place welded butt joints no further than 1/2" from the point detailed. Intermediate stiffeners varying ±1/2" maximum from the point detailed are allowed. Connector plates for field connections varying ±1/8" from the point detailed are allowed. Ensure that the actual centerline of bearing lies within the thickness of the bearing stiffener.

Members with end milled for bearing and members with faced end connection angles deviating from the detailed length by -0, +1/32" maximums are acceptable. All other members varying from detailed length by ±1/8" maximum are acceptable.

Align to within ±1/8" from the location shown on the approved shop drawings all steel requiring shop assembly for reaming, drilling from the solid or weld joint preparation.

Deviation from specified camber of fabricated members prior to shipment from the fabrication shop is limited to:

$$-0;\quad +\frac{3/32'' \times \text{No. of ft. from nearest bearing}}{10} \quad \text{up to } 3/4'' \text{ maximum}$$

Deviation from specified camber of erected steel bridge superstructures measured when the steel work is complete and the superstructure is subject to steel dead load stresses only is limited to:

$$-0;\quad \frac{+1/8'' \text{ X No. of ft from nearest bearing}}{10} \quad \text{up to } 1'' \text{ maximum}$$

If the plans do not require shop induced camber, provide an actual member that is straight or one of the following:

(1) If natural camber "turned up" is required, the maximum plus camber is the algebraic sum of the allowable deviation, dead load deflection, vertical curve ordinate, and superelevation ordinate;

(2) If natural camber 'turned down" is required, the maximum negative camber is equal to the algebraic sum of the dead load deflection, vertical curve ordinate, and superelevation ordinate.

1072-13 OXYGEN CUTTING

Oxygen cutting of structural steel is allowed, provided a smooth surface free from cracks and notches is secured and an accurate profile is secured by the use of a mechanical guide. Hand cut only where approved and grind smooth leaving no burnt edges.

In all oxygen cutting, adjust and manipulate the cutting agent to avoid cutting beyond (inside) the prescribed lines. Provide oxygen cut surfaces meeting the ANSI surface roughness rating value of 1,000 except ensure that oxygen cut surfaces of members not subject to calculated stress meet the surface roughness value of 2,000. Round corners of oxygen cut surfaces of members carrying calculated stress to a 1/16" radius, or an equivalent flat surface at a suitable angle, by grinding after oxygen cutting.

Fillet re-entrant cuts to a radius of not less than 1".

Remove surface roughness exceeding the above values and occasional notches, gouges, and cracks not more than 1/16" deep on otherwise satisfactory oxygen cut surfaces by chipping or grinding. Flair corrections of the defects with the surface of the cut on a bevel of 1 to 6 or flatter.

Repair occasional gouges of oxygen cut edges more than 3/16" deep but not more than 7/16" deep by welding with low hydrogen electrodes not exceeding 5/32" in diameter and with a minimum preheat of 250°F. Grind the completed weld smooth and flush with the adjacent surface. Radiographically test any gouge over 1/8" deep after the repair.

1072-14 EDGE PLANING

Plane sheared edges of plates more than 5/8" in thickness that carry calculated stress to a depth of 1/4". Fillet re-entrant cuts before cutting. Round all edges of plates and shapes parallel to calculated stress and all free edges of plates and shapes intended for coating or galvanizing to 1/16" radius or provide an equivalent flat surface at a suitable angle. Grind edges of all other plates and shapes to remove burrs, slag, or shear lip. The ends of all steel piles, intended for coating or galvanizing, are not required to be radiused, but remove all burrs, slag, and shear lip.

1072-15 FACING OR BEARING SURFACES

Provide a surface finish of bearing and base plates and other bearing surfaces that come in contact with each other or with concrete that meet the following ANSI surface roughness requirements as defined in ANSI B46.1, Surface Roughness, Waviness, and Lay, Part I:

Steel slabs .....ANSI 2,000
Heavy plates in contact in shoes to be welded .....ANSI 1,000
Milled ends of compression members, milled or
ground ends of stiffeners and fillers .....ANSI 500
Bridge rollers and rockers .....ANSI 250
Pins and pin holes .....ANSI 125
Sliding bearings .....ANSI 125

1072-16 ABUTTING JOINTS

Face and bring to an even bearing abutting joints in compression members and girder flanges, and in tension members where so indicated on the drawings. Where joints are not faced, do not exceed an opening of 1/4".

1072-17 BENT PLATES

Provide cold-bent, load carrying rolled-steel plates conforming to the following:

(A) Take from the stock plates so that the bendline is at right angles to the direction of rolling.

(B) Use a radius of bends such that no cracking of the plate occurs. Use minimum bend radii, measured to the concave face of the metal, as shown in Table 1072-4.

If a shorter radius is essential, bend the plates hot at a temperature not greater than 1200°F and air cool slowly down to a temperature of 600°F. Below 600°F only dry compressed air is permitted to artificially cool steels having a minimum yield strength greater than 36,000 psi. Use hot bent plates conforming to requirement 1 above.

(C) Before bending, round the corners of the plates to a radius of 1/16" throughout the portion of the plate at which bending occurs.

TABLE 1072-4
MINIMUM BEND RADII

Plate Thickness (t), Inches	Minimum Bend Radii, Ratio of Thickness
Up to 1/2	2t
Over 1/2 to 1	2 1/2t
Over 1 to 1 1/2	3t
Over 1 1/2 to 2 1/2	3 1/2t
Over 2 1/2 to 4	4t

NOTE: Hot bend low alloy steel in thicknesses over 1/2" for small radii, if required.

1072-18 HOLES FOR BOLTS AND OTHER FASTENERS

(A) General

Punch or drill all holes and remove any burrs. Punching material forming parts of a member composed of not more than 5 thickness of metal 1/16" larger than the nominal diameter of the fastener is allowed whenever the thickness of the material is not greater than 3/4" for structural steel, 5/8" for high-strength steel, or 1/2" for quenched and tempered alloy steel, unless subpunching and reaming is required by Subarticle 1072-18(D).

When there are more than 5 thicknesses or when any of the main material is thicker than 3/4" for structural steel, 5/8" for high-strength steel, or 1/2" for quenched and tempered alloy steel, either subdrill and ream or drill all holes full size.

When required by Subarticle 1072-18(D), subpunch or subdrill all holes (subdrill if thickness limitation governs) 1/4" smaller and, after assembling, ream 1/16" larger or drill full size to 1/16" larger than the nominal diameter of the fastener.

(B) Punched Holes

Do not use a diameter of the die exceeding the diameter of the punch by more than 1/16". If any holes require enlargement to admit the fasteners, ream such holes. Clean cut holes without torn or ragged edges. Poor matching of holes is cause for rejection. Grind all burrs smooth.

(C) Reamed or Drilled Holes

Make reamed or drilled holes cylindrical, perpendicular to the member, and complying with the size requirements of Subarticle 1072-18(A). Where practicable, direct reamers by mechanical means. Grind all burrs smooth. Poor matching of holes is cause for rejection. Ream and drill with twist drills. If required, take assembled parts apart for removal of burrs caused by drilling. Assemble connecting parts requiring reamed or drilled holes, securely hold while reaming or drilling and match mark before disassembling.

(D) Subpunching and Reaming of Field Connections

Subpunch or subdrill, if required according to Subarticle 1072-18(A), holes in all field connections and field splices of main members of trusses, arches, continuous beam spans, bents, towers (each face), plate girders, and rigid frames. Subsequently ream while assembled as required by Article 1072-21. Subpunch and ream to a steel template or ream while assembled all holes for floor beam and stringer field end connections. Ream or drill full size field connection holes through a steel template after the template is located with utmost care as to position and angle and firmly bolted in place. Use templates for reaming matching members, or the opposite faces of a single member that are exact duplicates. Accurately locate templates used for connections on like parts of members such that the parts or members are duplicates and require no match-marking.

(E) Accuracy of Punched and Subdrilled Holes

Accurately punch or subdrill all holes punched full size, subpunched, or subdrilled such that after assembling (before any reaming is done) a cylindrical pin 1/8" smaller in diameter than the nominal size of the hole enters perpendicular to the face of the member, without drifting, in at least 75 percent of the contiguous holes in the same plane. If the requirement is not fulfilled, the badly punched pieces are rejected. If any hole does not pass a pin 3/16" smaller in diameter than the nominal size of the hole, this is cause for rejection.

(F) Accuracy of Reamed and Drilled Holes

When holes are reamed or drilled, ensure that 85 percent of the holes in any contiguous group, after reaming or drilling, show no offset greater than 1/32" between adjacent thicknesses of metal.

Use all steel templates with hardened steel bushings in holes accurately dimensioned from the centerlines of the connection as inscribed on the template. Use the centerlines in locating accurately by the template from the milled or scribed ends of the members.

(G) Alternate Methods

As an option, make the fastener holes by procedures other than those described in Subarticles 1072-18(A) through 1072-18(F) provided that the requirements for quality and for dimensional accuracy are met. Wherever an alternate method is employed, demonstrate the ability of each alternate method to produce holes and connections consistently meeting all requirements for quality and dimensional accuracy for the type of joint fabricated. When such ability of an alternate method is previously demonstrated on similar work for the Department, continue its use by certifying, on each subsequent project, that the procedure and equipment are the same as the method previously qualified, and that the equipment involved is in good repair and adjustment. Failure of joints to meet the quality and accuracy requirements is cause for rejection. In the case of repeated failures revise and/or requalify the method or discontinue its use.

At the time of qualification of an alternate method, submit for approval a written procedure specification describing the procedures and equipment and giving upper and lower value limits and tolerances for all pertinent variables. Accurately reflect the actual procedures, equipment, and values used in the qualification tests. In addition to the certification on each subsequent project, the Engineer occasionally requests copies of the approved procedure specification.

(H) Oversize, Short-Slotted, and Long-Slotted Holes

Where shown on the plans or permitted in writing, use oversize, short-slotted, and long-slotted holes with high strength bolts 5/8" and larger in diameter. Do not allow the distance between edges of adjacent holes or edges of holes and edges of members to be less than permitted under the AASHTO specification. Oversize, short-slotted, and long-slotted holes are defined as follows:

(1) Oversize holes are 3/16" larger than bolts 7/8" and less in diameter, 1/4" larger than bolts 1" in diameter, and 5/16" larger than bolts 1 1/8" and greater in diameter. When oversized holes are permitted, they are allowed in any or all plies of friction type connections. Install hardened washers over exposed oversize holes.

(2) Short-slotted holes are 1/16" wider than the bolt diameter and have a length that does not exceed the oversize diameter requirements of Sub-paragraph 1 by more than 1/16". When short-slotted holes are permitted, they are allowed in any or all plies of friction-type or bearing-type connection. Locate holes without regard to direction of loading in friction-type connections, but orient normal to the direction of the load in bearing-type connections. Install hardened washers over exposed short-slotted holes.

(3) Long-slotted holes are 1/16" wider than the bolt diameter and have a length more than allowed in Sub-paragraph 2 but not more than 2 1/2 times the bolt diameter. Structural plate washers or a continuous bar not less than 5/16" in thickness are required to cover long slots that are the outer plies of joints. Ensure that these washers have a size sufficient to completely cover the slot after installation. When long-slotted holes are permitted, they are allowed in only one of the connected parts of either a friction-type or bearing-type connection at an individual faying surface.

When used in friction-type connections, locate holes without regard to direction of loading if one-third more bolts are provided than needed to satisfy the allowable unit stresses except as herein restricted.

When used in bearing-type connections, orient the long diameter of the slot normal to the direction of loading. No increase in the number of bolts over those necessary for the allowable unit stress is required.

(I) Misfits

When misfits occur for any reason, enlargement of the holes by reaming is limited to 1/16" over the nominal size hole called for unless otherwise permitted in writing.

(J) Erection Bolt Holes

At field welded connections where erection bolts are used, provide holes 3/16" larger than the nominal erection bolt diameter.

1072-19 INSTALLING BOLTS

Install high strength bolts in accordance with the requirements of Article 440-10.

1072-20 WELDING

(A) Definition

The Bridge Welding Code referred to herein is the edition of the ANSI/AWS/AASHTO Bridge Welding Code D-1.5 and any applicable interim that is current on the date of advertisement for the project, and as modified by the specifications.

(B) General

Weld all structural steel in the shop or in the field for bridges, whether permanent or temporary, and perform all other work related to structural welding including, but not limited to, testing and inspection of welds, preparation of material, oxygen cutting, electrodes, shielding, and shear studs, meeting the requirements of the Bridge Welding Code. Weld other steel items in accordance with the requirements of the applicable AWS Welding Code.

Weld only where shown on the plans or where called for in the Specifications unless requesting and receiving written approval for additional welding.

Show all permanent and all temporary welds on the shop drawings. For groove welds, indicate on the shop drawings the particular detail and process to be employed

in production of the work. For prequalified joints, use of the Bridge Welding Code letter classification designation of the joint (B-L2b-S etc.) along with the appropriate symbol satisfies this requirement. Tack welds that become part of a permanent weld are not required on the shop drawings.

Provide fillet welds, including seal welds, at least the minimum size allowed by the Bridge Welding Code for the thickness of material welded or the size called for on the plans, whichever is larger. For exposed, bare, unpainted applications of steel, the basic requirements for weld filler metal with atmospheric corrosion resistance and coloring characteristics similar to that of the base metal are mandatory. The variations from these basic requirements listed in the Bridge Welding Code for single pass welds are not permitted.

Use only Department approved electrodes for welding. The Department maintains a list of approved brands of electrodes for which satisfactory reports of tests made within one year are previously submitted. This list is available from the State Materials Engineer. Designate an appropriate storage area for all welding consumables that meets all requirements of the Bridge Welding Code.

(C) Qualification of Personnel

Ensure that each welder, welding operator and tacker is qualified in accordance with the Bridge Welding Code or other applicable AWS Welding Code as determined by the Engineer. Employ welders that are qualified by the Department. Welders shall be requalified by the Department every five years. Contact the Materials and Tests Unit to schedule qualification tests. Permanent in-shop welders employed by a fabricator who passed the appropriate welding tests and whose weldments are radiographically tested with acceptable results on a regular basis are exempt from additional testing when approved by the Engineer. Have a representative of the testing agency witness all phases of the qualification tests including preparation of the test plates and placing of welds. As evidence of such qualification, furnish a satisfactory certificate, or a copy thereof, issued by a testing agency which is approved by the Engineer, for each welder, welder operator, and tacker employed on the work. Submit certification for each welder, welding operator, or tacker, and for each project, stating the name and Social Security number of the welder, welding operator, or tacker; the name and title of the person who conducted the examination; the kind of specimens; the position of welds; the American Welding Society electrode classification used; the results of the tests; and the date of the examination. Such certifications are required for all persons performing shop or field welds of any kind on the work, whether permanent or temporary. Have each welder provide a picture ID upon request or other form of positive identification as required by the Engineer.

(D) Qualification of Welds and Procedures

Use welds, except as otherwise provided below, that are prequalified in accordance with the details, limitations, and procedures prescribed by the Bridge Welding Code or other AWS Welding Code as determined by the Engineer. Substitute other such prequalified welds for those shown on the plans, subject to the approval of the

Engineer. Use welds departing from those prequalified only if submitting to the Engineer details of the proposed joints and joint welding procedure Specification for approval, and at no cost to the Department demonstrate their adequacy in accordance with the requirements of the Bridge Welding Code.

Include in procedure specifications, upper and lower value limits of all variables listed for procedure qualification in the Bridge Welding Code for the process or processes used. Written welding procedure specifications are required for prequalified welds also.

On all welding, include in the welding procedure continuous visual inspection by welders, welding operator, tackers, welding supervisors, and all personnel involved in preparation of the material for welding.

Approval by the Engineer of the procedure specifications does not relieve the Contractor of his responsibility to develop a welding procedure that produces weldments meeting the required quality and dimensions.

If non-prequalified joints procedures are previously found acceptable to the Engineer on another project, furnish the inspector with a copy of the joint details and procedure specification approved at the time of qualification. Such documentation is required from each fabricator employing a non-prequalified joint or procedure on the work. Failure to produce such documentation results in the fabricator being required to requalify the joint or procedure, or to use prequalified joints, procedures, and procedure specifications.

On weldments where geometric shape prevents compliance with requirements to weld a particular position, alternate procedures are considered for approval. Previously qualified alternate procedures are considered for approval without further procedure qualification tests. No separate payment is made for developing, demonstrating, and documenting for future use such alternate procedures, as such work is considered incidental to the work of welding.

(E) Requirements for Testing and Inspection

Require the fabricator to make provisions for convenient access to the work for inspection and cooperate with the inspector during the required inspection and testing.

Inspect welds in the presence of the Department's inspector unless otherwise approved by the Department's inspector, using visual inspection and the nondestructive tests herein prescribed in addition to the test requirements of the Bridge Welding Code and the contract documents. Employ quality control inspectors and NDT technicians qualified in accordance with the Bridge Welding Code and preapproved by the Engineer prior to the start of any fabrication. Supply the appropriate certifications as required by the Bridge Welding Code to the Department's inspector for all inspectors. Individuals assigned to production welding activities or processes and their supervisors are not acceptable for performing quality control testing. Have a qualified welding inspector present any time welding is in progress. No separate payment is made for inspection and testing. The entire cost of

this work is included in the unit contract price for the structural steel item(s) involved.

Retest welds requiring repairs or replacement in the presence of the Department's inspector after the repairs or replacements are made.

If the Engineer finds that acceptable repair to defective work is not feasible; the entire piece is rejected.

Payment at the contract prices for the various items in the contract which include the work of welding is full compensation for all costs resulting from the required nondestructive testing of welds and from the required inspection of welds.

(F) Nondestructive Test Required

The extent of nondestructive testing required is as prescribed in the Bridge Welding Code and by the contract documents except radiograph all flange splices for their full length. The term "main members" in this regard means girders, beams, floor beams, stringers, truss members, high strength bolts, columns, bearing stiffeners, bearing shoes, high mount lighting standards, and components of main member carrying stress, including the end connections for such members. Nondestructive testing of other complete welds or weld passes is required when so noted on the plans or deemed necessary by the Engineer. Tests other than those prescribed are also required when deemed necessary by the Engineer. Perform all radiographic testing in accordance with procedures established by the Engineer. Copies of these procedures are available from the State Materials Engineer.

Use edge blocks when radiographing butt welds greater than 1/2" in thickness. Use edge blocks with a length sufficient to extend beyond each side of the weld centerline for a minimum distance equal to the weld thickness, but not less than 2" and with a thickness equal to or greater than the thickness of the weld. Use edge blocks with a minimum width equal to half the weld thickness, but not less than 1”. Center the edge blocks on the weld with a snug fit against the plate being radiographed allowing no more than 1/16" gap. Produce edge blocks from radiographically clean steel and provide a surface finish of ANSI 125 or smoother.

High mount lighting standards longitudinal groove welds and fillet welds are radiographically tested as specified by the contract drawings. Other nondestructive test methods are sometimes deemed necessary by the Engineer to determine the quality of the welds. No separate payment is made for inspection and testing. The entire cost of this work is included in the unit contract price involved.

(G) Welded Structural Shapes

Produce butt welds of flanges and webs, and fillet welds of web to flanges of plate girders and haunched beams using the submerged arc process. Produce other structural shapes built up from plates and bars using the submerged arc process unless another process is qualified for these joints in accordance with the Bridge Welding Code and is subject to the approval of the Engineer.

After all shop welded splices in the flanges and webs for the full length of the field section are made, tested, and approved, fit the flange plates tight and square against the web so as to leave no gap and to not bow the web. Brace one side of each flange against the web with gussets or struts and tack weld securely to the web at the stiffener locations. Upon removal of the welds, grind any nicks or gouges, preheat, weld and test or incorporate into the stiffener fillet weld.

Connect the flanges to the web by starting the fillet weld at one end of the girder and proceeding to the other ends.

As an option, make adjacent welds simultaneously.

The sequence for making the flange to web fillet welds is subject only to the provisions for control of shrinkage and distortion and to the position requirements of the Bridge Welding Code.

After flange to web welds are complete, shift bracing gussets or struts if necessary, then remove all temporary gussets or struts. Remove tack welds by grinding flush with parent metal.

Straighten any transverse warpage of the flanges if necessary by heating along the centerline of the outside face.

Fit tight, square, and tack weld stiffeners securely to the web. With the girder in the flat position (web horizontal), weld the stiffeners to the web. Do not weld or tack weld stiffeners to the flanges except where noted on the plans.

After all parts are welded into place, trim the girder to detail length with adjustments for slope and end rotation exceeding 1/4" net.

1072-21 SHOP ASSEMBLING

(A) General:

Assemble the field connections of main members of continuous beam spans, plate girders, and rigid frames in the shop with milled ends of compressing members in full bearing, and then ream their sub-size holes to specified size while the connections are assembled. Assembly shall be either Full Girder Assembly or Progressive Girder Assembly unless Full Girder Assembly or Special Complete Structure Assembly is required by the contract.

Furnish a camber diagram to the Engineer showing the camber at each panel point of each continuous beam line, plate girder, or rigid frame. When the shop assembly is Full Girder Assembly or Special Complete Structure Assembly, have the camber diagram show the camber measured in assembly. When any of the other methods of shop assembly is used, show the calculated camber in the camber design.

Clean surfaces of metal in contact before assembling. Assemble the parts of a member, pin well, and firmly draw together with bolts before reaming. Take assembled pieces apart, if necessary, for removal of burrs and shavings produced by the reaming operation. Ensure that the member is free from twists, bends, and other deformation.

Drift during assembling only to bring the parts into position, and not sufficient to enlarge the holes or distort the metal. If any holes are enlarged to admit the fasteners, ream them.

Match-mark those connecting parts assembled in the shop for the purpose of reaming holes in field connections and provide a diagram showing marks furnished by the Engineer.

(B) Full Girder Assembly

Full Girder Assembly consists of assembling all members of each continuous beam line, plate girder, or rigid frame at one time.

(C) Progressive Girder Assembly

Progressive Girder Assembly consists of assembling initially for each continuous beam line or plate girder at least 2 contiguous shop sections or all members in at least 2 contiguous shop panels but not less than the number of panels associated with three contiguous section lengths (i.e., length between field splices) and not less than 150 feet in the case of structures longer than 150 feet. Add at least 1 shop section at the advancing end of the assembly before removing any member from the rearward end, so that the assembled portion of the structure is never less than the specified above.

(D) Special Complete Structure Assembly

Special Complete Structure Assembly consists of assembling the entire structure, including the floor system.

Have each assembly, including camber, alignment, accuracy of holes, and fit of milled joints, approved by the Engineer before reaming.

1072-22 PAINTING AND OTHER PROTECTIVE COATINGS

Shop paint in accordance with the requirements of Section 442.

Repair galvanized surfaces that are abraded or damaged in accordance with Article 1076-6.

1072-23 MARKING AND SHIPPING

Paint or mark each member with an erection mark for identification and furnish an erection diagram with erection marks shown thereon.

Furnish to the Engineer as many copies of material orders, shipping statements, and erection diagrams as the Engineer directs. Show the weights of the individual members on the statement. Mark the weights on members weighing more than 3 tons. Load structural members on trucks or cars in such a manner that they are transported, unloaded, and stored at their destination without being excessively stressed, deformed, or otherwise damaged.

Structural members shall be loaded on trucks or cars in such as manner that they may be transported to their destination without being excessively stressed, deformed or otherwise damaged.

Restrain overhanging ends of beams or girders both vertically and horizontally to prevent excess movement. Chains are permitted to secure beams and girders during shipping only when adequate measures are taken to prevent damage to the material by the use of approved protective material. If necessary, use adequate bracing to prevent bending of the top flange.

Pack bolts of one length and diameter and loose nuts or washers of each size separately. Ship pins, small parts, and packages of bolts, washers, and nuts in boxes, crates, kegs, or barrels, but do not allow the gross weight of any package to exceed 300 lbs. Plainly mark a list and description of the contained material on the outside of each shipping container.

Steel die stamped heat numbers, fabricator's identity, station number, girder number and span number of main members into an unpainted area (if available) near the end of the member. Die stamp members with painted ends outside the painted area but as close to the end as possible.

Steel die stamp the heat numbers of all major components of main members in the near end, near side of each girder in such a manner that the heat number is referenced to the appropriate component. Paint the heat number on the painted surface of the member along with the erection marks.

Ship anchor bolts, washers, and other anchorage or grillage materials, in time to be incorporated into the masonry portion of the structure.

SECTION 1074
MISCELLANEOUS METALS AND HARDWARE

1074-1 WELDING

Certify all welders performing any welding on any metals in accordance with the applicable AWS welding code in the position and process required as approved by the Engineer.

1074-2 EXPANSION ANCHORS

Unless otherwise shown on the plans, provide expansion anchors consisting of 2 or more units with a minimum of 2 hard metal conical ring wedges and 2 expandable lead sleeves of an equally effective design that is approved by the Engineer. Use anchors providing a minimum safe holding power of 3,000 pounds for 3/4" bolts and 2,000 pounds for 5/8" bolts, based upon 1/4 of the actual holding power of the anchor in 3,000 psi concrete. Furnish satisfactory evidence, based upon actual tests performed by a commercial testing laboratory, which indicate that the anchors develop the minimum required safe holding power.

When it is proposed to use anchors that are previously accepted as meeting the above requirements, the anchors are accepted on the basis of a certified statement indicating the prior acceptance of the furnished anchors.

1074-3 PLAIN STEEL BARS WITH THREADED ENDS

Provide plain steel bars with threaded ends meeting the requirements of AASHTO M183.

1074-4 HARDWARE FOR TIMBER STRUCTURES

Use machine bolts, drift-bolts, and dowels that are either wrought iron or medium steel. Use washers that are cast iron ogee, malleable iron castings, or cut from medium steel or wrought iron plate.

Use machine bolts with square heads and nuts. Use nails that are cut or round wire of standard form. Use spikes that are cut, wire spikes, or boat spikes.

Use black or galvanized nails, spikes, bolts, dowels, washers, and lag screws for untreated timber.

Galvanize or cadmium plate all hardware for treated timber bridges, except malleable iron connectors.

1074-5 METAL BRIDGE RAILING

(A) General

As an option, use either aluminum or galvanized steel metal rail, provided that the same material is used on all structures on the project.

Certified mill test reports are required for rails and posts.

Place a permanent identifying mark that identifies the fabricator on each post. Use a method and location of the identifying mark such that it does not detract from the appearance of the post.

Where it is necessary for rails to be curved, form the curvature in the shop or in the field. Uniformly curve the rail without buckling or kinking. Perform all welding in accordance with AWS D1.1 for steel railing and AWS D1.2 for aluminum railing.

Provide an anchor unit of sufficient strength to insure load anchoring capacity as specified for rail loading in the AASHTO *Standard Specifications for Highway Bridges*.

(B) Aluminum Rail

Supply material for posts, post bases, rails, expansion bars, and clamp bars meeting the requirements of ASTM B221 for alloy 6061-T6.

Use material for rivets meeting the requirements of ASTM B316 for alloy 6061-T6. Use rivets that are standard button head and cone point cold driven.

Use material for nuts meeting the requirements of ASTM B211 for alloy 6061-T6.

Provide material for washers meeting the requirements of ASTM B209 for alloy alclad 2024-T3.

Supply material for shims meeting the requirements of ASTM B209 for alloy 6061-T6.

Ensure that the handrails meet the dimensional tolerance requirements of ANSI H35.2.

(C) Galvanized Steel Rail

Use posts, post bases, rails, expansion bars, and clamp bars meeting the requirements of AASHTO M183 and galvanize in accordance with AASHTO M111. Grind the cut ends of rail smooth and give them 2 coats of organic zinc repair paint. Galvanize the posts and post bases after they are riveted together.

Use rivets meeting the requirements of ASTM A502 for Grade 1 rivets.

Use bolts meeting the requirements of ASTM F593 alloy 304.

Use nuts meeting the requirements of ASTM F594 alloy 304.

Use washers meeting the requirements of ASTM F844 except made from alloy 304 stainless steel.

Use materials for shims meeting the requirements of ASTM A570 for Grades 36, 40, or 45, or A611 for Grade C, and galvanized in accordance with AASHTO M111.

1074-6 STEEL PIPE

Steel pipe bent or welded in fabricating shall meet the requirements of ASTM A53 for standard weight pipe. Use galvanized pipe unless otherwise shown on the plans.

1074-7 IRON CASTINGS

(A) General

Boldly fillet castings at angles, and provide arrises that are sharp and perfect. No sharp, unfilleted angles or corners are permitted. Provide castings that are true to pattern in form and dimensions, free from pouring faults, sponginess, cracks, blow holes, and other defects affecting their strength and value for the service intended. Sand blast or otherwise effectively clean of scale and sand all castings to present a smooth, clean, and uniform surface. Welding is not allowed for the purpose of making a casting structurally sound. Welding for cosmetic or other purposes is not allowed without approval of the Engineer.

(B) Gray Iron Castings

Supply gray iron castings meeting the requirements of AASHTO M306. Proof load testing will only be required for new casting designs during the design process. Acceptance of production castings will be based on test bars. Cast test bars, of size "B", attached to and integral with the castings. In lieu of this, cast test bars separate from the castings when approved in writing by the Engineer. The Engineer reserves the right to require that a test bar be machined from an actual casting if deemed necessary. Unless otherwise specified, do not coat gray iron castings. Do not perform any welding on castings for any reason without prior approval from the Engineer. Mark castings with the NCDOT Standard Number of the casting design.

1074-8 STEPS

Fabricate steps for minor drainage structures from deformed reinforcing bars, use gray iron castings meeting the requirements of Subarticle 1074-7(B), or use composite plastic-steel construction as shown on the plans.

The use of steps differing in dimension, configuration, or materials from those shown on the plans is allowed by furnishing the Engineer with details of the proposed steps and obtaining written approval for the use of such steps.

1074-9 FABRICATED STEEL GRATES

Use fabricated steel grates made from bars that meet the requirements of AASHTO M183. Galvanize the grates after fabrication in accordance with AASHTO M111.

1074-10 PINS

Supply pins for bearing assemblies meeting the requirements of either AASHTO M183 or AASHTO M169 for grades 1016 through 1030, unless otherwise required by the plans or specifications.

1074-11 WASHERS

Provide washers for use with fasteners meeting the requirements of AASHTO M293M. Provide washers for high strength bolts meeting the requirements of Article 1072-7.

Ensure that the size and finish (plain, weathering, or galvanized) of washers is compatible with the fastener.

1074-12 METAL STAY-IN-PLACE FORMS

Provide metal stay-in-place forms for concrete floor slabs of zinc-coated (galvanized) steel sheet conforming to ASTM specification A653 (Structural Steel (SS) Grade 33 through 80) with coating class of G165 meeting all requirements relevant to steel stay-in-place forms as noted on the contract plans. Do not use material thinner than 20 gage.

SECTION 1076
GALVANIZING

1076-1 GALVANIZING

Wherever galvanizing is required, perform the galvanizing in accordance with this section of the Specifications except where other requirements for galvanizing are included in other sections of the specifications.

1076-2 FABRICATED PRODUCTS

Galvanize products fabricated from rolled, pressed, and forged steel shapes, plates, bars, and strips, 1/8" thick and heavier in accordance with AASHTO M111. Fabricate products into the largest unit that is practicable to galvanize before the galvanizing is done. Fabrication includes all operations necessary to complete the unit such as shearing, cutting, punching, forming, drilling, milling, bending, welding, and riveting. Galvanize components of bolted or riveted assemblies separately before assembly. When it is necessary to straighten any sections after galvanizing, perform such work without damage to the zinc coating.

Completely seal all edges of tightly contacting surfaces by welding before galvanizing.

Commercial blast clean components with partial surface finishes in accordance with Subarticle 442-8(A) prior to pickling.

1076-3 HARDWARE

Galvanize iron and steel hardware in accordance with AASHTO M232.

1076-4 ASSEMBLED PRODUCTS

Galvanize assembled steel products in accordance with AASHTO M111.

Completely seal all edges of tightly contacting surfaces by welding before galvanizing.

1076-5 SHEETS

Galvanize iron or steel sheets in accordance with ASTM A653.

1076-6 REPAIR OF GALVANIZING

Repair galvanized surfaces that are abraded or damaged at any time after the application of zinc coating by thoroughly wire brushing the damaged areas and removing all loose and cracked coating, after which paint the cleaned areas with 2 coats of organic zinc repair paint meeting the requirements of Article 1080-9. Ensure that the total thickness of the 2 coats is not less than 3 dry mils. In lieu of repairing by painting with organic zinc repair paint, other methods of repairing galvanized surfaces that are abraded or damaged are allowed provided the proposed method is acceptable to the Engineer.

Excessive damage to galvanized surfaces as determined by the Engineer is cause for rejection. Replace or re-galvanize rejected galvanized material.

SECTION 1077
PRECAST CONCRETE UNITS

1077-1 GENERAL

Use precast concrete units from sources participating in the Department's Precast Concrete Quality Control/Quality Assurance Program. A list of participating sources is available from the Materials and Tests Unit's Central Laboratory. The Department will remove a manufacturer of precast concrete units from this program in the event that the monitoring efforts indicated that non-specification material is being provided or test procedures are not being followed.

This section covers the materials for and the production of precast reinforced concrete units produced in accordance with the contract.

Where precast reinforced concrete circular manhole sections are used, they shall meet the requirements of AASHTO M199 in addition to the requirements of this section.

1077-2 PLAN REQUIREMENTS

The plans for precast units will be standard drawings or details shown in the project plans, furnished by the Department.

When the Department does not make precast plans available and the Contractor chooses to precast, submit drawings to the Engineer for the items proposed to precast. Submit one

complete set of drawings for review, at least 40 calendar days prior to precasting. After acceptance, submit 7 complete sets of drawings. Acceptance by the Engineer of contractor drawings will not be considered as relieving the Contractor of any responsibility for precast units. When precast units are load bearing and require structure design, have the plans prepared and certified by a North Carolina Registered Professional Engineer. Contractor furnished drawings shall show complete design, installation, and construction information in such detail as to enable the Engineer to determine the adequacy of the proposed units for the intended use. Contractor drawings shall also include details of steel reinforcement size and placement and a schedule that lists the size and type of precast units at each location where the precast units are to be used. Produce precast units in accordance with the approved drawings.

1077-3 MATERIALS

All materials shall meet the requirements of Division 10 shown below:

Item	Section
Coarse Aggregate	1014-2
Fine Aggregate	1014-1
Portland Cement	1024-1
Type IP Blended Cement	1024-1
Fly Ash	1024-5
Water	1024-4
Type IS Blended Cement	1024-1
Ground Granulated Blast Furnace Slag	1024-6
Silica Fume	1024-7
Air Entraining Agent	1024-3
Chemical Admixtures	1024-3
Reinforcing Steel	1070
Miscellaneous Metals	1074
Curing Agents	1026

1077-4 INSPECTION

The Department reserves the right to place a duly authorized inspector in the plant at any time work related to the production of units for the Department is being performed. Notify the Engineer at least 7 days in advance when such work is scheduled to begin.

Provide an office area for the inspector of at least 50 square foot with desk, chair, telephone, facilities for proper heating and cooling, adequate lightning and electrical outlets.

Acceptance of precast units will be on the basis of tests of materials, compression tests on concrete cylinders, and inspection of the finished units, including amount and placement of steel reinforcement, to determine their conformance with the approved dimensions and design and their freedom from defect. The inspector will have the authority to reject any or all units not manufactured in accordance with these specifications. Any unit found to be defective in any manner at any time will be rejected and replaced by an acceptable unit or repaired in a manner approved by the Engineer.

(A) Storage

Store all Department units in a separate area on the yard. Store all units on a solid, unyielding foundation free of standing water or in a manner directed by the Engineer. Do not stack units prior to inspection.

(B) Transporting

Do not transport units away from the casting yard until the concrete has reached the minimum required 28 day compressive strength and a period of at least 5 days elapses after casting, unless otherwise permitted by the Engineer.

Do not transport any unit from the plant to the job site prior to the approval of that unit by the plant inspector. Such approval is stamped on the unit by the plant inspector.

1077-5 PORTLAND CEMENT CONCRETE

(A) Composition and Design

Portland cement concrete is composed of portland cement, coarse aggregate (#67 or 78M), fine aggregate, water, and, unless otherwise permitted by the Engineer, an air entraining agent. If other cementitious materials and/or chemical admixtures are used, use these materials in the proper proportions to obtain the optimum effect. Do not use calcium chloride, or other admixtures containing calcium chloride.

Supply concrete that develops a minimum compressive strength as shown in Table 1077-1 unless other strengths are designated on the approved drawings. When required, air entrain concrete to provide an air content of 4.5 percent, plus or minus 1.5 percent. Supply concrete with a maximum slump of 3 1/2" unless a high range water reducer (super plasticizer) is approved by the Engineer. Do not use concrete with a slump exceeding 6.0". As an option, reduce the cement content of the mix design by up to 20% and replace with fly ash at a rate of 1.2 pounds of fly ash for each pound of cement replaced or reduce the cement content up to 50% and replace with blast furnace slag on a pound for pound basis.

Submit a proposed concrete mix design for the precast units. Determine quantities of fine and coarse aggregates necessary to provide concrete meeting the requirements of the specifications by the method described in ACI 211*, Recommended Practice For Selecting Proportions For Normal Weight Concrete*, using the absolute volume method.

The Engineer will review the mix design only to ascertain general compliance with Specification requirements. Do not use a mix until notified that the mix is acceptable. Acceptance of the mix design does not relieve the Contractor of his responsibility to furnish an end product meeting specification requirements. Upon request from the Contractor, a precast concrete unit mix design accepted and used satisfactorily on any Department project may be accepted for use on other projects.

TABLE 1077-1

PRECAST CONCRETE STRENGTH REQUIREMENTS (AT AN AGE OF 28 DAYS)

PRECAST UNIT		SPECIFICATION REFERENCE
	Psi	
BARRIER		
Used Portable	3500	Sect. 1090 & 1170
New Portable	4500	Sect. 854, 1090, & 1170
Permanent	4500	Sect. 854, 857, & 1090
CULVERTS		
Circular Pipe	4000	Sect. 310, 1032, 1034, 1520, & AASHTO M170
Single Cell Box Sections	5000	Contract & AASHTO M259
Flared End Sections	3500	Sect. 310 & 1032
Pipe Tees	4000	Sect. 310, 1032, & AASHTO M170
Pipe Elbows	4000	Sect. 310, 1032, & AASHTO M170
Cross & Parallel Special End Sections	3500	Sect. 310 & 1032
DRAINAGE STRUCTURES		
Boxes (Solid & Waffle)	4000	Sect. 840 & ASTM C913
CIRCULAR MANHOLES		
Base	4000	Sect. 1525 & AASHTO M199
Riser Section	4000	Sect. 1525 & AASHTO M199
Top Section	4000	Sect. 1525 & AASHTO M199
Grade Ring	4000	Sect. 858 & AASHTO M199
Noise/Sound, Wing, Head & End Walls	4000	AASHTO M199
Concrete Pads For Outlet Pipe	2500	Sect. 815, 816, & 825
Right Of Way Markers	2500	Sect. 806 & 1054
MISCELLANEOUS ITEMS		
Concrete Anchor For Cable Guardrail	3000	Sect. 1046
Picnic Tables	2500	Contract
Waste Containers	2500	Contract

** Strength varies by Class.

(B) Testing

Make all representative concrete test cylinders and all testing required by this subarticle in the presence of the plant inspector unless otherwise approved by the Engineer.

Before the first load is placed, determine the air content by a calibrated Chace Indicator, AASHTO T199. If the air content as determined by the Chace indicator fails to meet the specification requirements, perform 2 more tests with the Chace indicator on the same load and all 3 tests are averaged. Acceptance or rejection of the load is based on the average of the 3 Chace indicator tests. As an alternate method determine the air content by AASHTO T152, T196, or T121.

Perform temperature, air and slump tests whenever cylinders are cast.

Determine slump in accordance with AASHTO T119 with a maximum of 3 1/2" allowed.

For the purpose of testing for the required 28 day compressive strength, furnish, at no cost to the Department, a minimum of 4 concrete cylinders for each class of concrete, each structure, and each day that precast units are produced for the Department. If the contractor anticipates an early break request, furnish the Department with 2 concrete cylinders for each early break request. These cylinders are in addition to the 4 concrete cylinders required for each day of production. Make and cure cylinders in accordance with AASHTO T23 unless, by permission of the Engineer, the units are cured by one of the methods in Article 1077-9 for the full time required to meet the specified compressive strength requirements. In such case, cure the cylinders with the members and in the same manner as the members. Test cylinders in accordance with AASHTO T22. If the average of 2 cylinders tested to determine compressive strength at the age of 28 days fails to indicate a compressive strength as shown in Table 1077-1, or such compressive strength as is required by the approved drawings, such failure is cause for the rejection of the members represented.

(C) Temperature requirements

Maintain the concrete temperature at the time of placing in the forms not less than 50°F nor more than 95°F unless otherwise directed by the Engineer.

Place concrete in cold weather in accordance with the requirements of Article 420-9.

(D) Use of Water Reducing Admixtures

Use water reducing admixtures in accordance with Subarticle 1000-4(G).

Use high range water reducers (super plasticizers) if approved by the Engineer.

1077-6 FORMS

Use forms of sturdy construction and which are capable of consistently providing straight lines and uniform dimensions in the finished product. Use metal forms except where other materials are approved by the Engineer. Provide an identifying number on each form, and mark each precast unit with the same identifying number as the form used to cast unit. Forms not meeting these requirements are subject to rejection by the Engineer.

Provide joints in forms that are smooth and tight enough to prevent leakage of mortar. Provide inside surfaces of forms that are accessible for cleaning. After each use, clean the forms thoroughly. Prior to casting, free the inside surfaces of the forms from rust, grease, or other foreign matter. Do not allow coatings used for release of members to build up and in no case allow liquid or powder from coating materials to come in contact with the reinforcement steel.

1077-7 REINFORCEMENT

Furnish reinforcement and place as shown on the plans and in accordance with the requirements of Section 425. Stockpile domestic and foreign steel in separate locations.

1077-8 PLACING CONCRETE

Use the procedures and equipment for handling, placing, and consolidating the concrete such that a uniformly dense and high grade concrete is obtained in all parts of the unit under all working and weather conditions. Do not mix, handle, deliver, place, or finish concrete using devices made of aluminum or containing aluminum.

Internal, external, or a combination of internal and external vibration is required as necessary to produce uniformly dense concrete without honeycomb.

1077-9 CURING CONCRETE

(A) General

Precast units are subjected to one of the methods of curing described below or to other methods or combinations of methods approved by the Engineer. Cure the precast units for a sufficient length of time so that the concrete develops the specified compressive strength at 28 days or less. Do not strip forms until at least 24 hours after the concrete attains initial set. For this purpose, initial set is defined as at least 500 psi resistance to a standard penetrometer. The option to strip forms earlier is available provided concrete cylinders indicate a strength of at least 75% of the 28 day compressive strength is attained prior to release for each day's production. Do not deface or injure the units.

(B) Curing at Elevated Temperatures

Cure at elevated temperatures in accordance with the requirements of Subarticle 1078-10(B).

(C) Water Curing

Water curing of precast units is allowed as described in Article 420-16 B, by covering with water saturated material, or by a system of perforated pipes, mechanical sprinklers, porous hoses, or by any other method that keeps the units moist during the specified curing period. Do not use methods that deface or injure the precast units.

(D) Curing Compound

Application of a curing compound is allowed provided it is left intact until the specified compressive strength is met. Keep all surfaces moist prior to the application of the compound and damp when the compound is applied. Seal the

surface with a single uniform coating at the rate of coverage recommended by the curing compound manufacturer, or as directed by the Engineer, but not less than 1 gallon per 150 square feet of area.

1077-10 LIFT HOLES, HANDLING

Do not cast or drill more than 4 holes in each unit for the purpose of handling or placing unless otherwise approved by the Engineer. Locate all lift holes and handling devices in accordance with plan and design requirements. Units damaged while being handled or transported are rejected or require repair in a manner approved by the Engineer.

1077-11 FINAL FINISH

Unless otherwise required by the contract, finish all concrete in accordance with Subarticle 420-18(B).

Do not repair units with honeycomb, cracks, or spalls until inspected by the Engineer. Use repair methods that are approved by the Engineer prior to their use. Any appreciable impairment of structural adequacy is cause for rejection.

1077-12 STEPS FOR PRECAST DRAINAGE STRUCTURES

Supply steps meeting the requirements of AASHTO M199 for design, materials, and dimensions. Incorporate steps in all drainage structures over 3'-6" in height. Do not detail the lowest step more than 16" from the bottom.

1077-13 MARKING

Clearly show the following information on each precast member:

(A) Date of manufacture.

(B) Name of the manufacturer.

(C) Piece mark designations where such designations are shown on the plans.

(D) For precast culverts, match mark each precast member by a method approved by the Engineer, prior to shipment.

Indent marking into the concrete or paint on with waterproof paint.

1077-14 DIMENSIONS

Ensure that all dimensions allow assembly of the units in place without objectionable deviation from the lines shown on the plans. If requested by the Engineer, assemble the precast members to ensure a quality fit prior to shipment of the precast members.

SECTION 1078
PRESTRESSED CONCRETE MEMBERS

1078-1 GENERAL

This section covers the materials for and the production of precast, prestressed concrete members produced in accordance with the contract.

Use prestressing of the pretensioning type in which steel prestressing strands are initially stressed and anchored; the concrete is then placed, vibrated, and cured; and when the concrete reaches the required strength, the load is transferred from the anchorages to the concrete.

1078-2 MATERIALS

Use materials meeting the requirements of Division 10 shown below:

Item	Section
Coarse Aggregate	1014-2
Fine Aggregate	1014-1
Portland Cement	1024-1
Type IP Blended Cement	1024-1
Fly Ash	1024-5
Water	1024-4
Air Entraining Agent	1024-3
Chemical Admixtures	1024-3
Reinforcing Steel	1070
Prestressing Strand	1070-5
Structural Steel	1072
Miscellaneous Metals	1074
Type IS Blended Cement	1024-1
Ground Granulated Blast Furnace Slag	1024-6
Silica Fume	1024-7
Epoxy Protective Coating	1081-1

Do not make changes in the source of aggregates, cements, or admixtures during the casting of members in any one span or substructure unit unless approved by the Engineer.

1078-3 INSPECTION

The Department reserves the right to place a duly authorized inspector in the plant at any or all times work related to the production of members for the Department is performed. Notify the Engineer at least 7 days in advance when such work is scheduled. Provide an office area with an approximate floor space of 100 square feet, a desk or drafting table, 2 chairs, telephone, separate dial-up or faster internet access, facilities for proper heating and cooling, and adequate lighting at the plant for the exclusive use of the inspector. The inspector has the authority to reject any or all members not manufactured in accordance with these Specifications. Approval of any member by the inspector at the plant, however, is in no way final, and further inspection is made at the structure site both before and after the member is placed in the final position. Any member found to be defective in any manner at any time is rejected and requires replacement by an acceptable member or repair in a manner approved by the Engineer.

Do not transport any member from the plant to the job site prior to approval of that member by the plant inspector. Provide access to all surfaces of the member so that the plant inspector has the opportunity to properly inspect the member prior to approval. This approval is stamped on the member by the plant inspector.

1078-4 PORTLAND CEMENT CONCRETE

(A) Composition and Design

Supply portland cement concrete composed of portland cement, coarse aggregate, fine aggregate, water, and an approved air-entraining agent. Add other cementitious materials and/or chemical admixtures if approved by the Engineer. When admixtures are used, use them in the proper proportions to obtain the optimum effect. Do not use set accelerating admixtures, calcium chloride, or admixtures containing calcium chloride. If approved, high range water reducer may be used at a rate not to exceed the manufacturer's recommended dosage.

Supply concrete with a minimum compressive strength of 5,000 psi at the age of 28 days, unless otherwise required by the plans or Specifications. Ensure that all coarse aggregate used in prestressed concrete passes a 1" sieve. Maintain a cement content of at least 564 lbs. but no more than 752 lbs. per cubic yard. As an option, reduce the cement content of the mix design and replace with fly ash or ground granulated blast furnace slag in accordance with Subarticle 1024-1(A). For concrete with a 28 day design strength greater than 6,000 psi, if approved, substitute microsilica for cement, in conformance with Subarticle 1024-1(A).

Supply concrete meeting the requirements of Table 1078-1, unless otherwise approved by the Engineer.

TABLE 1078-1
REQUIREMENTS FOR CONCRETE

	28 Day Design Compressive Strength 6,000 psi or less	28 Day Design Compressive Strength greater than 6,000 psi
Maximum Water/Cementitious Material Ratio	0.45	0.40
Maximum Slump without HRWR	3.5"	3.5"
Maximum Slump with HRWR	7"	7"
Air Content (upon discharge into forms)	5 ± 2%	5 ± 2%

Submit to the Engineer proposed concrete mix designs for each strength of concrete used in the work. Determine quantities of fine and coarse aggregates necessary to provide concrete meeting the requirements of the specifications by the method described in ACI211, "Recommended Practice for Selecting Proportions for Normal Weight Concrete", using the absolute volume basis.

Submit mix designs, stated in terms of saturated surface dry weights, on M&T Form 312 at least 35 days prior to using the proposed mix. Adjust batch proportions to compensate for surface moisture contained in the aggregates at the time of batching. Changes in the saturated dry mix proportions are not permitted unless revised mix designs are submitted to the Engineer and are determined to be acceptable for use.

Provide with Form 312 a listing of laboratory test results of aggregate gradation, air content, slump, and compressive strength. List the compressive strength of at least three 6"x12" or 4"x8" cylinders. Show the age of the cylinders at the time of testing and a detailed description of the curing procedure. Perform laboratory tests in accordance with the following test procedures:

Aggregate Gradation	-- AASHTO T27
Air Content	-- AASHTO T152
Slump	-- AASHTO T119
Compressive Strength	-- AASHTO T23 and T22

If the design 28 day compressive strength is greater than 6,000 psi, submit the compressive strength of at least six cylinders. Ensure that the average strength of the six cylinders is at least 1,500 psi above the minimum 28 day compressive strength required by the plans.

When the combination of materials is such that the required strength and/or a workable slump is not obtained at the minimum specified cement content with the maximum allowable water-cement ratio, increase the cement content at no cost to the Department by whatever amount is required to produce the required strength and/or slump without exceeding the allowable water-cement ratio.

The Engineer reviews the mix design only to ascertain general compliance with Specification requirements. The Engineer notifies the Contractor, in writing, that the mix design is either acceptable or unacceptable. Do not use a mix until notified by the Engineer that the mix design is acceptable. Acceptance of the mix design does not relieve the Contractor of responsibility to furnish an end product meeting specification requirements. Upon request, a mix design accepted and used satisfactorily on any Department project may be accepted for use on other projects.

(B) Testing

Employ a certified concrete technician to perform all testing required by this subarticle at the bed site in the presence of the plant inspector unless otherwise approved. Certification of technicians is awarded upon satisfactory completion of examinations prepared and administered by the Division of Highways or other approved agency.

(1) Air Content

Before allowing placement of the first load in a bed, determine the air content by a calibrated Chace indicator, AASHTO T199. During the placement of the first load, determine the air content by AASHTO T152, T196, or T121. Determine the air content in each subsequent 10 cubic yards by the Chace indicator, AASHTO T199, prior to allowing placement. Determine the air content by AASHTO T152, T196, or T121 from all loads from which cylinders are made. If the air content as determined by the Chace indicator, AASHTO T199, fails to meet the specification requirements, a second test is run on material from the same load and the results of the 2 tests averaged. If

the average does not meet the Specification requirements, a test on the same load is conducted using AASHTO T152, T196, or T121. Acceptance or rejection of the load is based on the results of this test.

(2) Slump

Determine slump in accordance with AASHTO T119.

(3) Strength

For the purpose of testing for the required 28 day compressive strength and also for the required compressive strength for the transfer of load, furnish, at no cost to the Department, cylinders made from a sample of concrete placed near the live end of the bed and additional cylinders made from a sample of concrete placed near the dead end of the bed. Make cylinders in accordance with AASHTO T23, except cure the cylinders in the same manner as the members represented until the strands are released. Place cylinders in clusters at random points along the casting bed. After the strands are released, air cure the cylinders in an approved common area near the testing apparatus for the remainder of the 28 day curing period. Test the cylinders in accordance with AASHTO T22. Provide approved apparatus for testing the transfer strength of the cylinders. Maintain this apparatus to within 1.0 percent accuracy and calibrate at intervals not to exceed 12 months by an approved testing company at no cost to the Department. The Engineer reserves the right to require verification immediately after a testing machine is relocated and whenever there is reason to doubt the accuracy of the indicated load, regardless of the time interval since the last verification.

The testing requirements vary according to the 28 day compressive strength required by the plans as follows:

(a) Compressive Strength (28 day) of 6,000 psi or Less

Test two cylinders, one from each end of the bed, for the purpose of determining whether the concrete has reached the required strength for transfer of load. Ensure that the average of the strength tests on the two cylinders meets or exceeds the required strength and the lowest cylinder is not more than 200 psi below the required strength.

Test two cylinders to determine compressive strength at the age of 28 days. The strength from these two cylinders is averaged. Ensure that this average is at least 5,000 psi or such 28 day compressive strength required by the plans or Specifications. Ensure that no cylinder indicates a compressive strength less than 400 psi below the required 28 day compressive strength. Failure to meet the above requirements is cause for rejection of the members represented.

(b) Compressive Strength (28 day) of greater than 6,000 psi

Test four cylinders, two from each end of the bed, for the purpose of determining whether the concrete has reached the required strength for transfer of load. The strengths from the dead end cylinders are averaged and the strengths from the live end cylinders are averaged. Ensure that both of

these averages meet or exceed the required release strength and the lowest cylinder is not more than 200 psi below the required strength.

Test three cylinders from each end to determine the 28 day compressive strength. The strengths from the dead end cylinders are averaged and the strengths from the live end cylinders are averaged. Ensure that both of these averages meet or exceed the 28 day compressive strength. Ensure that no cylinder indicates a compressive strength less than 400 psi less than the required 28 day compressive strength. Failure to meet the above requirements is cause for rejection of the members represented.

(C) Temperature Requirements

Maintain a concrete temperature at the time of placing in the forms between 50°F and 95°F.

Do not place concrete when the air temperature, measured at the location of the concreting operation in the shade away from artificial heat, is below 35°F.

(D) Elapsed Time for Placing Concrete

Ensure that the elapsed time for placing concrete is in accordance with Subarticle 1000-4(E). The requirements of Subarticle 1000-4(E) pertaining to Class AA concrete also apply to prestressed concrete.

(E) Use of Set Retarding Admixtures

By permission of the Engineer, use an approved set retarding admixture if choosing to take advantage of the extended time interval between adding mixing water and placing the concrete.

Use a quantity of set retarding admixture per 100 lbs. of cement within the range recommended on the current list of approved set retarding admixtures issued by the Materials and Tests Unit.

(F) Use of Water Reducing Admixtures

Use water-reducing admixtures in accordance with Subarticle 1000-4(G).

(G) Use of Calcium Nitrite Corrosion Inhibitor

Add an approved calcium nitrite corrosion inhibitor (30% solids) to the concrete mix at the batch plant for the bridge elements identified by the plan notes. Clearly mark the prestressed concrete members that contain calcium nitrite.

Use the inhibitor at a minimum rate of 3.0 gal/yd^3. Ensure that the hardened concrete contains at least 5.1 lbs/yd^3 Nitrite (NO_2) when tested in accordance with Materials and Tests Method Chem. C-20.0 with the exception of concrete used in prestressed members. Test prestressed members as follows:

The Department will perform the complete *C-21.0 Field Test Procedure for the Nitrite Ion in Plastic Concrete* on plastic concrete samples obtained randomly from a truck used to pour concrete near each end (live end and dead end) of a prestressed concrete casting. Powder samples will be taken from hardened cylinders made at the time C-21.0 is run for any concrete that fails the C-21.0 (plastic test) method. The

Chemical Testing Laboratory will test the powder using method *C-20.0 Determination of Nitrite in Hardened Concrete*. Acceptance of the concrete is dependent in the results of method C-20.0 (hardened test) when any sample fails the C-21.0 (plastic test method).

The Department will perform a qualitative nitrite ion check by method C-22.0 (Field Spot Test) on each load of concrete batched for a prestressed concrete casting bed. Acceptance of the concrete is dependent on the results of method C-20.0 (hardened test) when any sample fails the C-22.0 (Field Spot Test). The producer may elect to not incorporate concrete that fails Method C-22.0 (Field Spot Test) in lieu of waiting for C-20.0 (hardened test) test results to determine the acceptability of the member. Once per each week's production of prestressed concrete with corrosion inhibitor, random samples of hardened concrete powder will be taken from cylinders used for method C-21.0 (plastic test). These samples will be submitted to the Chemical Testing Laboratory for analysis using method C-20.0 (hardened test).

Units with calcium nitrite in a quantity less than specified are subject to rejection. Furnish concrete cylinders to the Engineer, in a quantity to be specified, to verify the concentrations of calcium nitrite in hardened concrete. Concrete failing to contain calcium nitrite at the required concentrations as tested is subject to rejection.

Use only air-entraining, water-reducing, and/or set-controlling admixtures in the production of concrete mixtures that are compatible with calcium nitrite solutions.

Strictly adhere to the manufacturer's written recommendations regarding the use of admixtures including storage, transportation and method of mixing. If preferred, use calcium nitrite, which acts as an accelerator, in conjunction with a retarder to control the set of concrete, as per the manufacturer's recommendation.

(H) Measuring Materials

Measure materials in accordance with Article 1000-9.

(I) Mixers and Agitators

Use mixers and agitators meeting the requirements of Article 1000-10.

(J) Mixing and Delivery

(1) General

Mix and deliver concrete to the site of the work by means of one of the following methods, except where other methods are approved by the Engineer. The Engineer approves the mixing of concrete by methods other than those listed below provided the proposed method is capable of satisfying job requirements and there is adequate evidence that the proposed method produces concrete complying with Specification requirements. Assume responsibility for controlling the materials and operations in such a manner as to produce uniform concrete meeting Specification requirements.

Have present during all batching operations at the concrete plant a certified concrete technician employed by the Contractor, prestressed concrete producer, or concrete supplier while concrete is batched and delivered to the

site of the work. The sole duty of this employee is to have charge of and exercise close supervision of the production and control of the concrete. Have the technician perform moisture tests, adjust mix proportions of aggregates for free moisture, complete batch tickets (M & T Form 903) or approved delivery tickets, sign batch tickets or approved delivery tickets, and assure quality control of the batching operations. Delivery tickets are permitted in lieu of batch tickets (M & T Form 903) provided they are reviewed and approved by the Materials and Tests Unit. Certification of technicians is awarded upon satisfactory completion of examinations prepared and administered by the Division of Highways or other approved agency.

(a) Central Mixed Concrete

Mix completely in a stationary mixer and transport the mixed concrete to the point of delivery in a truck agitator or in a truck mixer operating at agitating speed or in non-agitating equipment approved by the Engineer. Mix within the capacity and at the mixing speeds recommended by the equipment manufacturer.

(b) Transit Mixed Concrete

Mix completely in a truck mixer while at the batching plant, in transit, or at the work site.

(2) Mixing Time for Central Mixed Concrete

The mixing time starts when all the solid materials are in the mixing compartment and ends when any part of the concrete begins to discharge. Charge the ingredients into the mixer such that some of the water enters in advance of cement and aggregate, and substantially all the water is in the drum before one-third of the specified mixing time elapses. Transfer time in multiple drum mixers is counted as part of the mixing time.

Establish the minimum mixing time by either:

(a) Mixer performance tests as described in this subarticle,

(b) The manufacturer of the equipment,

(c) The requirement of 1 minute for mixers of 1 cubic yard capacity or less with an increase of 15 seconds for each cubic yard or fraction thereof in increased capacity.

The Engineer reserves the right to require a mixer performance test at any time. The minimum mixing time as determined by the mixer performance test is that which produces concrete meeting the requirements of Table 1078-2.

Sample and test for mixer performance as provided below. Charge the mixer to its rated capacity with the materials and proportions used in the work and mix at the recommended mixing speed to the target time. Stop mixing then and begin discharging. Take two samples of sufficient size to make the required tests after discharge of approximately 15 and 85 percent of the load

by an appropriate method of sampling which provides representative samples of the concrete.

Separately test each of the 2 samples of concrete for the properties listed in Table 1078-2. Conduct tests in accordance with the standard methods shown in Table 1078-2 or procedures established by the Materials and Tests Unit.

Perform the mixer performance test described above on a minimum of 2 batches of concrete. For the performance test to be acceptable, ensure that all tests in each batch meet the requirements listed above.

The Engineer rechecks mixer performance at any time when in his judgment acceptable mixing is not accomplished.

Where acceptable mixing cannot be accomplished in the established mixing time, the Engineer increases the mixing time or requires that the mixer be repaired or replaced before any further mixing.

(3) Truck Mixers and Truck Agitators

Use truck mixers and truck agitators meeting the requirements of Subarticle 1000-11(C). For concrete with a design 28 day compressive strength greater than 6,000 psi, load trucks to within 1 yd.^{3} of rated capacity and mix at a speed of 16 – 18 revolutions per minute.

(4) Delivery

For central mixed concrete delivered in truck agitators, truck mixers, or transit mixed concrete, use a ticket system for recording the transportation of batches from the proportioning plant to the site of the work. Fill out the tickets (M & T Form 903) or approved delivery tickets in accordance with the instructions issued by the Engineer. Issue the tickets to the truck operator at the proportioning plant for each load and have them signed by the certified concrete technician, which signifies that the concrete in the truck is inspected prior to departure. Show on each ticket the time batching is complete and if transit mixed, the number of revolutions at mixing speed, if any, at the plant. Deliver the tickets to the inspector at the site of the work. For central mixed concrete delivered in non-agitating equipment, alternate methods of documenting batch proportions are considered by the Engineer. Loads that do not arrive in satisfactory condition within the time limits specified are not acceptable for use in the work.

(K) Ready Mixed Concrete Plant

Have ready mixed concrete plants inspected and approved by the Department before they are used to produce concrete for the project. Ensure that plants meet all applicable requirements of the Specifications and in addition have at least 2 acceptable concrete delivery vehicles that are in working condition. Plants approved by the Department are placed on a list of approved plants that is made available. All plants are subject to reinspection at intervals selected by the Engineer.

Reapproval after each inspection is contingent on continuing compliance with the Specifications.

TABLE 1078-2
REQUIREMENTS FOR UNIFORMITY OF CONCRETE WITHIN A BATCH

Tests	Maximum Permissible Difference in Test Samples
Air content, percent by volume of concrete AASHTO T152)	1.0%
Slump, inches (AASHTO T119)	1.0"
Coarse aggregate content, portion by weight of each sample retained on the No. 4 sieve, percent	6.0%
Weight per cubic foot (AASHTO T121)	1.0 lb.
Average compressive strength at 7 days, percent of average (AASHTO T22 and T23)	7.5%*

* Obtain tentative approval pending 7 day compressive strength tests.

1078-5 CASTING BED AND FORMS

Use metal forms, including headers or end forms, except where other materials are approved by the Engineer. Use forms of adequate thickness, braced, stiffened, anchored, and aligned adequately to consistently produce members within the limits of dimensional tolerances. Design and align the forms so they do not restrict longitudinal movement of the casting when the prestressing force is transferred. Provide corners and angles that are chamfered or rounded. Provide joints in forms that are smooth and tight enough to prevent leakage of mortar. Plug holes and slots in forms, pallets, headers, and bulkheads neatly to prevent leakage of mortar. Make the inside surfaces of forms accessible for cleaning. Thoroughly clean the beds and forms after each use. Prior to casting, clean the inside surfaces of the forms from rust, grease, or other foreign matter. Remove all foreign substances from inside the forms, including any standing water. Do not allow coatings used for release of members to build up. Do not use forms that do not present a smooth surface.

When casting holes through the top flange of Bulb Tee Girders for overhang or interior bay falsework hanger rods, use rigid PVC conduits with a wall thickness of approximately 1/8". Do not use thin wall material. Secure conduits in the forms so that they do not migrate out of the proper location. Other methods of forming holes may be proposed but are subject to the Engineer's approval.

When casting dowel rod holes in cored slab or box beam members, use material that creates round, vertical holes of the specified diameter and in the correct location. Do not use material that deforms, collapses or shifts position during casting of the member.

Apply form release agents to the forms either before or after stringing of strands. If applied prior to stringing, provide a release agent of a type that dries to a degree so that it cannot contaminate any strand that comes in contact with it. If the release agent is applied after stringing, exercise great care and provide a sheet metal or similar type shield for protection of the strands.

1078-6 TENSIONING DEVICES

Use tensioning devices adequate to produce and maintain the required tension in all strands until the concrete reaches the required transfer strength. Equip all jacks with accurate and calibrated gages for registering jacking loads. Calibrate gages with the jacks with which they are used. Calibrate all jacks and gages by an approved testing company at no cost to the Department at intervals not to exceed 12 months. During progress of the work, if gage readings and elongations indicate materially differing loads, recalibrate as required. Use gages with a full load capacity of 1 1/2 to 2 times their normal working load, unless otherwise approved. Do not use loads less than one-fourth or more than three-fourths of the total graduated gage capacity unless calibration data clearly establishes consistent accuracy over a wider range. Use gages with indicating dials at least 6" in diameter and gage pointers that do not fluctuate, preventing an accurate reading, but remain steady until the jacking load is released. Ensure that all gages have an accuracy of reading within 2 percent. Provide means for measuring the elongation of strands within 1/4".

1078-7 PLACING STRANDS, TIES, AND REINFORCING STEEL

Position strands, ties, supports, reinforcing bars of the sizes shown on the plans and bearing plates in accordance with the detailed dimensions shown on the plans and effectively secure against displacement from their correct positions. For prestressing strands, do not allow deflections or displacements of any kind between the end anchorages unless shown on the plans. Place the steel reinforcing in final position after tensioning of the strands. Bend all tie wires to the inside of the member so that the ends are farther from the edge than the material tied. Support bottom strands spacings not to exceed 20 feet by supports meeting the requirements of Article 1070-4 or by other approved means. Plastic supports may be used when approved.

Strands with kinks, bends, nicks, scale, excessive rust, or other defects are not permitted. No more than one broken wire per casting bed is permitted. Slight rusting is not cause for rejection, provided it is not sufficient to cause visible pits. Take precautions to prevent contamination of strands and reinforcing steel. Clean the strands and reinforcing steel to an acceptable condition before pouring concrete. Do not place concrete in the forms until the strand and reinforcement condition and arrangement are inspected by the plant inspector.

Strand splices are only permitted at the end of a reel and when using a single strand jack. Ensure that the strand lengths to be spliced together have the same lay of wire to avoid unraveling and position the splice so that it does not fall within a member. Do not torch cut the ends of the spliced strand lengths. Cut by shears, abrasive grinders, or other means approved by the Engineer. No more than one strand splice is permitted on an individual strand and the reuse of strands is not permitted.

Where debonding of strands is required, accomplish by encasing the strand in a tubular conduit capable of resisting the pressure exerted by the concrete. Do not use slit conduit. Use a conduit of high density polyethylene or polypropylene with a minimum wall thickness of 0.025". Ensure that the inside diameter of the conduit is of sufficient size to allow free movement of the encased strand but not greater than the diameter of the strand plus 1/8". Secure the conduit so that longitudinal movement along the strand is prevented, and bonding of the strand is prevented at the required location plus or minus 1". Prevent concrete from

entering the conduit by taping. Use tape manufactured from a non-corrosive material compatible with the concrete, conduit, and steel.

1078-8 TENSIONING PROCEDURE

Tension each strand to the load shown on the plans prior to placing the concrete.

Measure the load induced in the prestressing strand both by jacking gages and strand elongations on at least the first 5 strands and every third strand thereafter on each pour. Measure loads on all other strands by either jacking gages or strand elongations. When both methods of measurement are used, if a discrepancy between gage and elongation of more than 5 percent is apparent, carefully check the entire operation and determine the source of error before proceeding. Make appropriate allowances in the computed elongation and jacking loads for load losses due to friction and all possible slippage or relaxation of the anchorage. Establish references periodically at each strand anchorage to indicate any yielding or slippage that may occur between the time of initial tensioning and final release of the strands.

In determining the applied load by measuring the elongation of the strand, use a modulus of elasticity taken from the typical stress-strain curve for the brand, size, and type of strand tensioned. Submit stress-strain curve data for the actual heats of material used in the strands to the plant inspector before using the strands. Identify each reel or strand by tagging in accordance with AASHTO M203. Mark the outer layer of each reel pack of strand with a wide color band as follows: white for 270K stress relieved strand, green for low relaxation strand, and a double marking of green and red for special low relaxation strand. In addition, attach a metal tag to each reel pack labeled in accordance with AASHTO M203.

Tension strands in a group or individually. Prior to full tensioning, bring each strand to an initial tension of 2,000 lbs. for all beds under 150 ft. in length, 3,000 lbs. for all beds 150 to 300 ft. in length, and 4,000 lbs. for all beds longer than 300 ft. in length. Measure this initial tension by a calibrated gauge or other approved means, and then compute the elongation due to initial tensioning. Use the difference between the required final tension and the initial tension to compute the expected additional elongation.

For precast prestressed deck panels, use a final prestressing force of 14,000 lbs. per strand for Grade 250 strand and 16,100 lbs. per strand for Grade 270 strand.

After initial tensioning, tension the strands until the required elongation and jacking load are attained and reconciled within the limits specified above. Keep a permanent record of the initial jacking load, the final jacking load, and the elongation produced thereby.

In single strand tensioning, rotation of the jacking ram is not allowed.

When draped strands are used, submit 6 sets of the bed layout showing the method of draping and tensioning the draped strands and also calculations determining the loads required for tensioning the draped strands. Drape the strands for all members to be cast in any one tensioning operation before casting any beam. Have end templates or bulkheads at ends of beams remain vertical or as otherwise shown on the plans. Perform draping for all members either simultaneously or in single or incremental lifts beginning at the center of the bed and working outward toward each end of the bed. Complete tensioning in the fully draped position is not allowed unless approved in writing.

Use round steel rollers of a type and dimensions approved by the Engineer for deflecting the draped strands. Round the part in contact with the strand to a diameter of not less than 3/4". Use support and hold-down devices of sufficient rigidity with adequate support so that the final position of the strands is as shown on the plans.

With strands tensioned in accordance with the above requirements and with other reinforcement in place, cast the concrete members so as to achieve the required lengths. Maintain strand load between anchorages until the concrete reaches the required compressive strength for transfer of load from the anchorages to the members.

For personnel engaged in the tensioning operation, provide protection by means of effective shields adequate to stop a flying strand. Provide shields produced from steel, reinforced concrete, heavy timbers, and other approved material at both ends of the bed.

1078-9 PLACING CONCRETE

Place concrete in accordance with Article 1077-8 and the additional requirements of this article.

Place concrete for girders 54" or less in height, and concrete for all cored slabs and box beams, in 2 or more equal horizontal layers. Place concrete for girders over 54" height in 3 horizontal layers. When placing concrete in 3 layers, locate the top of the first layer approximately at the top of the bottom flange and locate the top of the second layer approximately at the top of the web. Place and compact each layer before the preceding layer takes initial set so that there is no surface of separation between layers. Should shrinkage or settlement cracks occur, the Engineer reserves the right to require additional layers and/or vibration.

The requirement of the above paragraph may be waived with the permission of the Engineer if self consolidating concrete is used.

Internal or a combination of internal and external vibration is required as is necessary to produce uniformly dense concrete without honeycomb.

Place concrete in cold weather in accordance with the requirements of Article 420-9.

Place concrete in daylight unless an adequate lighting system meeting the approval of the Engineer is provided.

Do not exceed a temperature of 95°F in the freshly mixed concrete when placed in the forms.

Place the concrete in the bed in one continuous operation, finishing each member before proceeding to the next one. If the pour shall be stopped before the concrete in all the members in the bed is placed, start curing immediately. Do not place concrete in any remaining members in that bed setup once curing at elevated temperatures has begun.

Rough float the tops of girders. Give the top surface of cored slabs a broom finish. Finish prestressed concrete members that are intended for composite action with subsequently placed concrete with a roughened surface for bonding. Make sure that no laitance remains on the surfaces to be bonded.

When box beams are cast, employ a positive hold-down system to prevent the voids from moving. Design the system to be left in place until the concrete has reached release strength. At least six weeks prior to casting box beams submit to the Engineer for review and comments, detailed drawings of the proposed void material and hold-down system. In addition to structural details, indicate the location and spacing of the holds-downs. Submit the proposed method of concrete placement and of consolidating the concrete under the void.

1078-10 CURING CONCRETE

(A) General

Cure concrete by steam curing, radiant heat curing or water curing, as set forth below. As an option, cure concrete for prestressed piles with membrane curing compound as set forth below. Use a method or methods that prevent the concrete from losing moisture at any time before curing is complete. Use methods that do not deface or injure the concrete. Use curing procedures that prevent cracks from occurring in the members. Cure all members in any one bed by the same method.

Continue the curing period until the concrete reaches sufficient strength to permit transfer of load from the anchorage to the members. As soon as the concrete attains release strength, immediately release all forms in a continuous operation, without delay for other activities such as the cleaning of forms. Immediately following the removal of the forms, de-tension the members.

(B) Curing at Elevated Temperatures

Perform radiant heat curing under a suitable enclosure that contains the heat and prevent moisture loss. Apply moisture by a cover of moist burlap, cotton matting, or similar approved material. Retain moisture by covering the member with an approved waterproof sheeting in combination with an insulating cover. Support the cover at a sufficient distance above the member being cured to allow circulation of the heat.

Provide steam curing enclosures essentially free of steam leakage in order to minimize moisture and heat losses. Do not allow the enclosure to come in contact with the members or forms for the members. Do not direct steam jets on the forms so as to cause localized high temperatures.

After placing and vibrating, allow the concrete to attain its initial set prior to the application of heat or steam. The concrete is considered to obtain its initial set when it has a penetration resistance of at least 500 psi when tested in accordance with AASHTO T197. Take the sample of concrete tested for penetration resistance from the last load cast in the bed. Store the sample of concrete with the precast member and maintain in the same condition and environment as the member except for the periods of time necessary to prepare the test specimen and to perform the penetration resistance test. Conduct the penetration resistance test.

As an option, submit data indicating that an approved concrete mix attains its initial set after some particular time period. Different periods may be required for different weather conditions. If such data is submitted, consideration is given to permitting heat or steam introduced after the time indicated by such data in lieu of having to

perform the penetration resistance test. Consideration is also given to determining the time of initial set by methods other than AASHTO T197 provided data supporting such other methods is submitted.

When the ambient air temperature is below 50°F, cover the forms after the placement of concrete and apply sufficient heat to maintain the temperature of the air surrounding the unit between 50° and 70°F.

When the ambient air temperature is above 70°F, initiate a water cure as set forth below or other approved method as soon as the concrete is able to receive the water without physical damage to its surface. Discontinuation of the cure is allowed upon introduction of steam, provided that a relative humidity of 100 percent is maintained.

Cure at elevated temperatures at a temperature of not more than 160°F.

Maintain a relatively uniform rate of increase of the temperature within the curing enclosure of approximately 40°F per hour, not to exceed 15°F per 15 minutes. Ensure that the temperature increase is relatively uniform throughout the length and on both sides and top of the concrete unit. Place recording thermometers within 50 feet of each end of the bed and at points not to exceed 100 feet between the end thermometers. Provide a minimum of 2 thermometers for bed lengths of 100 feet or less. Calibrate recording thermometers at intervals not to exceed 6 months. Ensure that the temperature differential within the curing enclosure does not exceed 15°F. Submit complete temperature records for all cures before final approval of the members.

Continue steam curing until the concrete reaches the required transfer strength.

(C) Water Curing

Keep the concrete continuously wet by the application of water as soon as possible without damage to the concrete surface, and before the concrete obtains an initial set of 500 psi. Apply the water using soaker hoses and wet burlap or other approved means for the full length of each member. Apply water evenly along the entire length of the bed.

When the ambient air temperature is below 50°F cover the forms after the placement of the concrete and apply sufficient heat in an approved manner to maintain the temperature of the air surrounding the member between 50°F and 70°F. After the concrete obtains an initial set of 500 psi, the air temperature surrounding the member is allowed to increase to 100°F while continually maintaining moisture on the surface of the concrete. Whenever heat is applied to the member, place temperature recording clocks on the bed as required when curing at elevated temperatures. The requirements for rate of temperature increase also apply.

Maintain the application of heat (if used) and water until the concrete obtains release strength.

(D) Curing with Membrane Curing Compound

As an option, cure prestressed concrete piles with a membrane curing compound. Spray the entire surface of the concrete uniformly with a wax-free, resin-base curing

compound conforming to the requirements of Article 1026-2. Use clear curing compound to which a fugitive dye is added for color contrast.

Apply the membrane curing compound after the surface finishing is complete, and immediately after the free surface moisture disappears. In the event the application of curing compound is delayed, start another curing method immediately and continue until the application of the curing compound is started or resumed or until the concrete reaches the required detensioning strength.

Seal the surface with a single uniform coating of the specified type of curing compound applied at the rate of coverage recommended by the manufacturer or as directed by the Engineer, but not less than 1 gallon per 150 square feet of area.

At the time of use, thoroughly mix the compound in a condition with the pigment uniformly dispersed throughout the vehicle. If the application of the compound does not result in satisfactory coverage, stop the method and apply water curing, as set out above, until the cause of the defective work is corrected.

At locations where the coating shows discontinuities, pinholes, or other defects, or if rain falls on the newly coated surface before the film dries sufficiently to resist damage, apply an additional coat of the compound immediately after the rain stops at the same rate specified herein.

When the ambient air temperature is below 50°F, cover the forms after the application of the curing compound and apply sufficient heat in an approved manner to maintain the temperature of the air surrounding the member between 50°F and 70°F. Whenever heat is applied to the members, place recording thermometers on the bed as required when curing at elevated temperatures. The requirements for rate of temperature increase also apply.

Completely remove any curing compound adhering to a surface to which new concrete is bonded by sandblasting, steel wire brushes, bush hammers, or other approved means.

Protect the concrete surfaces to which the compound is applied from abrasion or other damage that results in perforation of the membrane film until the concrete achieves design strength and the members are de-tensioned.

1078-11 TRANSFER OF LOAD

Transfer load from the anchorages to the members when the concrete reaches the required compressive strength shown on the plans. Remove or loosen all formwork and release any hold-downs in one continuous operation as quickly as possible as soon as release strength is obtained. As soon as the forms are removed, transfer the load from the anchorages to the members as quickly as possible in one continuous operation using the approved detensioning sequence.

For any particular group of members cast in the same bed, do not transfer the load to any concrete until the test cylinder breaks indicate that the concrete in all these members has reached the required strength as outlined in Subarticle 1078-4(B)(3). If these conditions are not met, delay the transfer of the prestressing load to the concrete until tests of additional cylinders show that the required strength is reached.

When curing at elevated temperatures, begin the procedures for transferring prestressing load immediately after curing is discontinued and the forms are released, and while the concrete is still hot in order to prevent cooling shrinkage and cracking. If so directed by the Engineer, cover members or otherwise protect so as to cool the concrete slowly after release in order to prevent thermal shock and the evaporation of moisture in the members.

Transfer load to not cause cracks in members. Transfer load by gradual release of the strands as a group, by gradual release of part of the group, or by burning the fully tensioned strands at the ends of the members. If intending to release the strands by a method other than gradual release of the entire group, submit 6 copies of the proposed method and pattern of release, if not so shown on the plans, for approval. Rigidly follow the approved method and pattern of release. When the fully tensioned strands are burned, burn each strand or group of strands simultaneously at each end of the bed in its indicated order in the pattern and at each end of each member before proceeding to the strands in the next group in the pattern at any point. Because of the critical nature of the bond development length in prestressed concrete panel construction, if transferring of stress by burning the fully tensioned strands at the ends of the member, burn each strand first at the ends of the bed and then at each end of each member before proceeding to the next strand in the burning pattern.

When detensioning all girders, box beams, cored slabs, piles, and panels do not burn strands quickly but heat with a low oxygen flame played along the strand for a minimum of 5" until the metal gradually loses its strength. Apply heat at such a rate that failure of the first wire in each strand does not occur until at least 5 seconds after heat is first applied. When detensioning other members, follow the above procedure unless an alternate procedure is approved. Detensioning by arc welder is not allowed.

Incorporate the following in the method for single strand detensioning of members having draped strands:

(A) Release the pair of straight strands located in the uppermost position in the lower flange first.

(B) Then release the tension in the draped strands at the ends and uplift points in accordance with an approved pattern.

(C) Disengage all hold-down devices for draped strands and release the hold-downs.

(D) Then release the pair of straight strands located in the upper flange.

(E) Release the remaining straight strands of the pattern in accordance with an approved sequence.

(F) Release all strands in a manner meeting the Engineer's approval that will cause a minimum shock and lateral eccentricity of loading.

Failure to follow the above procedures for transfer of load is ground for rejection of the members involved.

1078-12 VERTICAL CRACKS IN PRESTRESSED CONCRETE GIRDERS PRIOR TO DETENSIONING

Provide prestressed concrete girders without objectionable cracks. This Specification addresses prestressed concrete girders that have vertical casting cracks in the middle half of

the member length prior to strand detensioning. Certain types of these cracks have been determined by the Department to render the girders unacceptable.

Unacceptable cracked members include, but are not limited to, those with two or more full height vertical cracks spaced at a distance less than the member depth. Such members are not considered serviceable and will be rejected. Full height cracks are cracks that begin at or near the top of the member and extend down to or below the center of gravity of the bottom group of prestressed strands.

Except as noted above, members with one or more vertical cracks that extend into the bottom flange are subject to an engineering assessment to determine their acceptability. If this engineering assessment is required, submit, at no additional cost to the Department, a proposal for repairing the member and a structural evaluation of the member prepared by a North Carolina Licensed Professional Engineer. In the structural evaluation, consider the stresses under full service loads had the member not cracked and the effects of localized loss of prestress at the crack as determined by methods acceptable to the Department.

For members designed for zero tension under full service loads, the maximum magnitude of the computed concrete tension at the lower end of the cracks is the square root of the specified design strength of the concrete. The maximum width of the crack at the bottom of the web is 3 mils after detensioning. For all other members, the maximum magnitude of the computed concrete tension at the lower end of the crack is 350% of the square root of the specified design strength of the concrete, and the maximum width of the crack at the bottom of the web is 4 mils after detensioning.

The Department has final determination regarding acceptability of any members in question.

1078-13 PRESTRESSED CONCRETE GIRDER WEB SPLITTING

After detensioning of certain girders with draped strands, cracks occasionally occur in the webs at the ends of the girders. If such cracks occur, employ a method to remedy this condition on all subsequent girders of the same type and strand pattern. If debonding of strands is used, satisfy the following criteria:

(A) Debond alternate rows of draped strands 2 feet from each end of the girder.

(B) Do not debond the two straight strands in the top of the girder. Debond one half of the straight strands, as nearly as possible, in the bottom flange. As nearly as possible, debond one quarter of the straight strands in bottom of girder 4 feet from each end of the girder and debond one quarter of the straight strands 2 feet from each end of the girder.

(C) Use a debonding pattern that is symmetrical about the vertical axis of the girder for both draped and straight strands.

(D) Debond strands so that the centers of gravity of the draped strands and the straight strands in the bottom of the girder remain within 1" of their original location at the end of the girder.

(E) Debond strands by encasing the strand in a conduit meeting the approval of the Engineer. Conduit may be rigid one-piece or rigid two-piece split sheathing. Do not use flexible conduit or sheathing.

No separate payment is made for debonding strands as payment is included in the contract unit price bid for prestressed concrete girders.

1078-14 HANDLING, TRANSPORTING AND STORING

Members damaged while being handled or transported are rejected or require repair in a manner approved by the Engineer. All members are allowed to be handled immediately after transfer of load from the anchorages to the members is complete.

Store all prestressed members on solid, unyielding, storage blocks in a manner to prevent torsion or objectionable bending. In handling prestressed concrete girders 54" or less in height, including cored slabs, maintain them in an upright position at all times and pick them up within 3 feet of the points of bearing and transport and store supported only within 3 feet of points of bearing. In handling prestressed concrete girders greater than 54" in height, maintain them in an upright position at all times and submit for approval the proposed method of lifting, transporting, and storing the girders.

Prestressed concrete panels are weak in the direction perpendicular to the prestressing strands, therefore, they are subject to breakage during handling, storing or transporting. Provide adequate blocking during all of these construction phases.

In handling, transporting, and storing prestressed members, utilize the number and location of supports in accordance with the plan requirements for the sizes, lengths, and types of members involved, or as approved.

When handling the prestressed concrete members, a temporary stress of $5\sqrt{f_{ci}}$ is permitted, where f_{ci} is the strength of concrete at release, in psi.

Do not transport members away from the casting yard until the concrete reaches the minimum required 28 day compressive strength and a period of at least 5 days elapses since casting, unless otherwise permitted.

Do not transfer any member from the plant to the job site prior to approval of that member by the plant inspector. This approval is stamped on the member by the plant inspector.

1078-15 FINAL FINISH

Broom finish the top surface of the cored slab sections. No surface finish is required for sides and bottom of the slab sections except the exposed side of the exterior slab sections as noted below. Provide a resulting surface finish essentially the same color and surface finish as the surrounding concrete.

Rake the top surface of the box beam section to a depth of 3/8". No surface finish is required for sides and bottom of the box beam sections except the exposed side of the exterior beam section as noted below. Provide a resulting surface finish essentially the same color and surface finish as the surrounding concrete. Fill all voids in the outside face of exterior box beams with a sand-cement or other approved grout. Repair voids greater than

1/4" in diameter or depth in other faces of the box beams in a like manner. Where an excessive number of smaller voids exist in any member, the Engineer requires a similar repair.

Provide a 3/4 " chamfer along the bottom edges on ends and sides of all box beam and slab sections, top outside edges of exterior sections and acute corners of sections. Round the top edges on ends of all sections with a 1/4" finishing tool. Provide square corners along top edges on all sections along shear keys. Do not chamfer vertical edges at ends of sections.

Fill all voids in the diagonal face of the bottom flange of prestressed concrete girders and the outside face of exterior cored slabs with a sand-cement or other approved grout. Fill all voids in piles greater than 1/2" in diameter or depth as above. Provide a resulting surface finish essentially the same color and surface finish as the surrounding concrete. Repair voids greater than 1/4" in diameter or depth in other faces of these and other members except piles in a like manner. Where an excessive number of smaller voids exist in any member, the Engineer requires a similar repair.

Repair honeycomb, excessively large fins, and other projections as directed. Do not repair members with honeycomb, cracks, or spalls until inspected by the Engineer. Any appreciable impairment of structural adequacy that cannot be repaired to the satisfaction of the Engineer is cause for rejection.

Clean and fill holes caused by strand hold downs upon removal from the casting bed. Use patches of materials approved by the Engineer that develop strength at least equal to the minimum 28 day strength requirement for the concrete prior to approval of the member. Ensure that members are clean and surfaces have a uniform appearance.

Give the top surface of prestressed concrete panels a raked finish or other approved finish to provide an adequate bond with the cast-in-place concrete. As soon as the condition of the concrete permits, rake the top surface of the concrete making depressions of approximately 1/4". Take care when raking not to catch and pull the coarse aggregate.

Clean reinforcing bars exposed on the tops of girders and exterior cored slabs of mortar build up and excessive rust.

Apply epoxy protective coating to the ends of prestressed members as noted on the plans.

1078-16 ALIGNMENT AND DIMENSIONAL TOLERANCES

(A) Cored Slabs

In order to ensure a good, neat field fit, assemble cored slab spans in the yard and have pieces matchmarked. Ensure that pieces fit together neatly and in a workmanlike manner.

Manufacture cored slabs within the tolerances indicated in Table 1078-3.

TABLE 1078-3
TOLERANCES FOR PRESTRESSED CORED SLABS

Dimension	Tolerance
Depth (A)	+3/8" to -1/8"
Width (B)	±1/4"
Length (C)	±1/8" per 10'
Position of voids - Vertical (D)	±3/8"
Position of voids - Horizontal (E)	±3/8"
Position of void Ends – Longitudinal	+1", -3"
Square ends - Deviation from square (horizontal)or vertical) or designated skew (F)	±1/4"
Horizontal alignment - Deviation from a straight line parallel to the centerline of member (G)	0-30 ft. long: 1/4" 30-50 ft. long: 3/8" 50+ ft. long: 1/2"
Camber - Differential between adjacent units (H)	1/4" per 10', 3/4" max.
Camber - Differential between high and low members of same span (H)	3/4" max.
Position of dowel holes - Deviation from plan position (I)	1/4"
Width - Any one span	Plan width +1/8" per joint
Width - Differential of adjacent spans in the same structure	3/4"
Bearing area - Deviation from plane surface	1/16"
Local smoothness (J)	1/4" in 10'
Position of holes for transverse strands	Horizontal (K): ±1/2" Vertical (L): ±3/8"
Position of strands (M)	±1/4"

NOTE: Dimensions followed by an alphabetical suffix are shown in Figure 1078-1

(B) Girders

Manufacture girders within the tolerances indicated in Table 1078-4.

(C) Piles

Manufacture piles within the tolerances indicated in Table 1078-5.

(D) Sheet Piles

Manufacture sheet piles within tolerances indicated in Table 1078-6.

(E) Prestressed Concrete Panels

Manufacture prestressed concrete panels within the tolerances indicated in Table 1078-7.

(F) Box Beams

In order to ensure a good, neat field fit, assemble box beam spans in the yard and have pieces match-marked. Ensure that pieces fit together neatly and in a competent manner.

Manufacture box beams within the tolerances indicated in Table 1078-8.

1078-16 IDENTIFICATION OF MEMBERS

Permanently identify each prestressed member by number and date of manufacture, and paint this information, or otherwise mark as approved by the Engineer, on at least one end of the member as soon as practical after manufacture. In the case of girders or cored slabs, also paint other identification as to station, span, and position within the span on at least one end of the member.

1078-17 QUALITY CONTROL

Maintain a daily quality control record form approved by the Engineer including pertinent information concerning tensioning, concrete quality and placement, curing, and detensioning. Have this form signed and dated by a certified concrete technician. Furnish a copy of the completed or up-to-date form to the Materials and Tests Unit upon request and before any members are approved. A sample form, indicating the minimum required information, is available from the Materials and Tests Unit.

FIGURE 1078-1
PRESTRESSED CORED SLABS

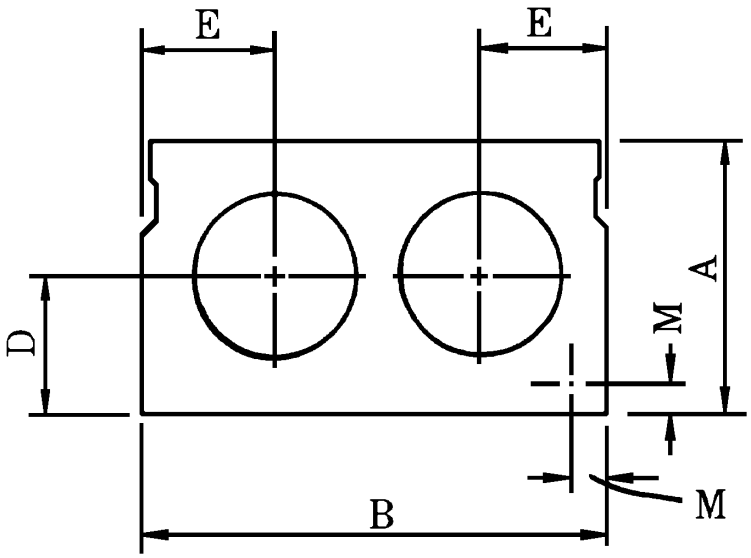

SECTION

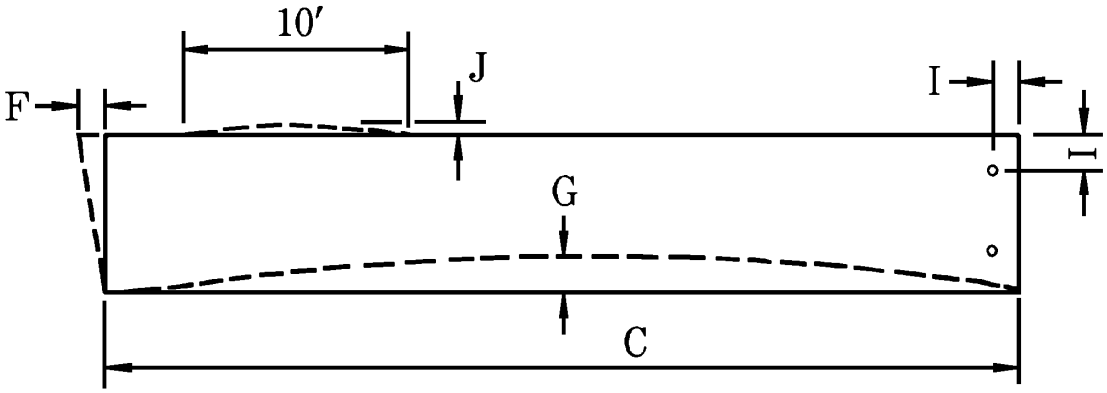

PLAN

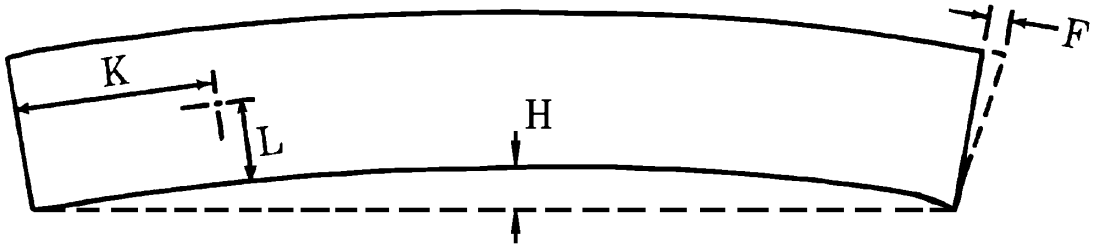

ELEVATION

TABLE 1078-4
TOLERANCES FOR PRESTRESSED GIRDERS

Dimension	Tolerance
Length (A) Girders 80 ft. or shorter	±1/8" per 10'
Length (A) Girders longer than 80 ft.	±1/8" per 10' Not to exceed 1 1/2"
Width - Flanges(B)	+3/8" to -1/8"
Width - Web (C)	+3/8" to -1/8"
Depth - Overall (D)	+1/2" to -1/4"
Depth - Flanges (E)	±1/4"
Horizontal alignment (top or bottom flange) - Deviation from a straight line parallel to the centerline of beam (F)	1/8" per 10' Not to exceed 1"
Bearing plate – Deviation from plane surface	1/16"
Girder ends – Deviation from square or Designated skew (G and H)	Vertical (G): ±1/8" per 12" of girder height. Horizontal (H): ±1/2"
Position of stirrups - Projection Above top of girder (I)	±1/2"
Position of stirrups – Placement along girder length	±1"
Local smoothness of any surface (J)	1/4" in 10'
Position of holes for tie rods (K)	±1"
Position of strands (L)	±1/4"

NOTES: Dimensions followed by an alphabetical suffix are shown in Figure 1078-2

The length (A) is measured along the top of the top flange.

The tolerances at girder ends (G & H) are increased to 1" if the girder end is to be encased in a full depth concrete diaphragm

FIGURE 1078-2
PRESTRESSED GIRDERS

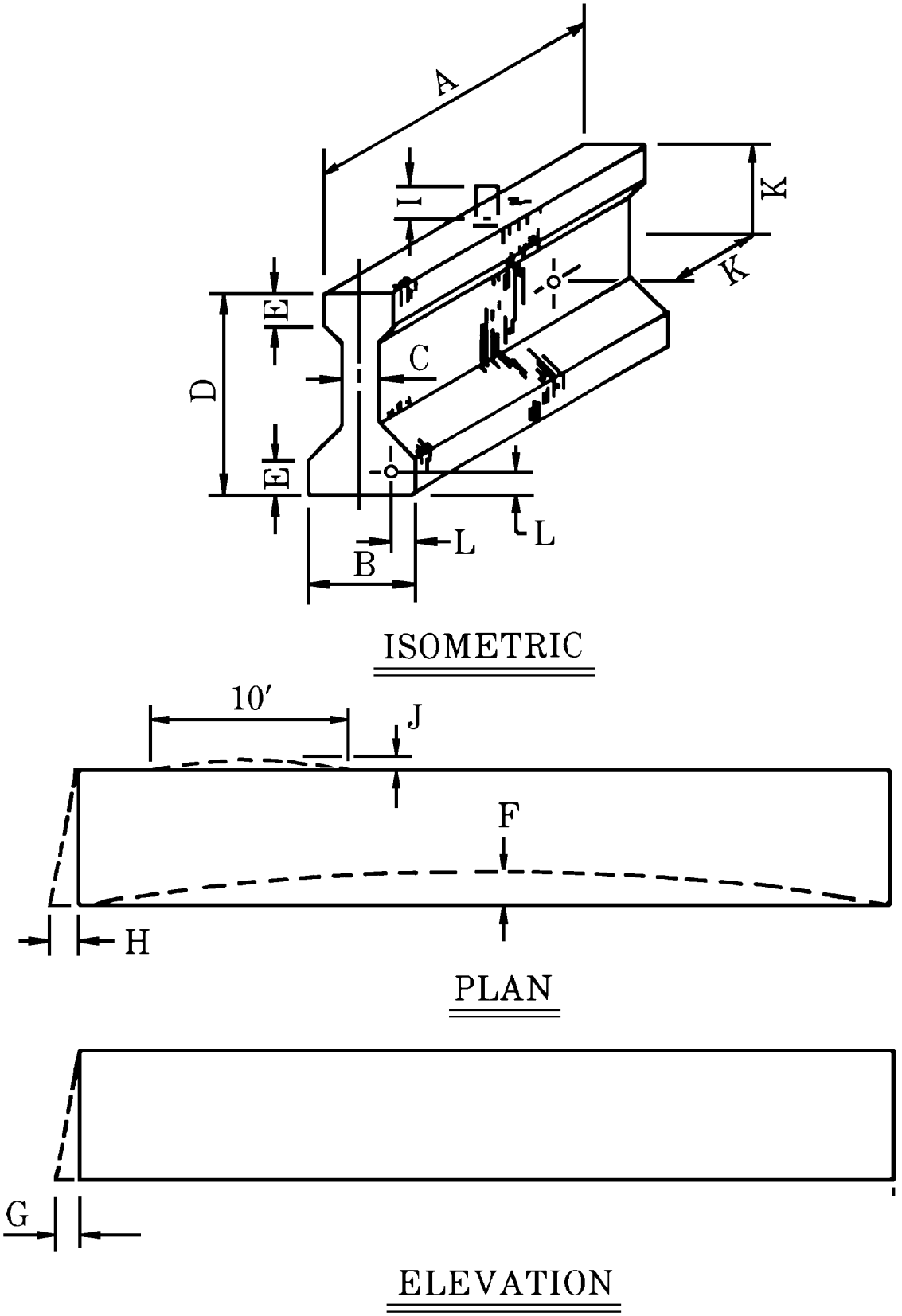

TABLE 1078-5
TOLERANCES FOR PRESTRESSED PILES

Dimension	Tolerance
Width (A)	-1/4" to +3/8"
Length (B)	±1 1/2"
Horizontal alignment - Deviation from a straight line parallel to the centerline of pile (C)	1/8" per 10'
Squareness of ends (D)	1/8" per 12" of width, 3/16" max.
Local smoothness (E)	1/4" in 10'
Position of strands (F)	1/4"
Position of mild reinforcing steel, including spiral pitch	1/2"

NOTE: Dimensions followed by an alphabetical suffix are shown in Figure 1078-3

FIGURE 1078-3
PRESTRESSED PILES

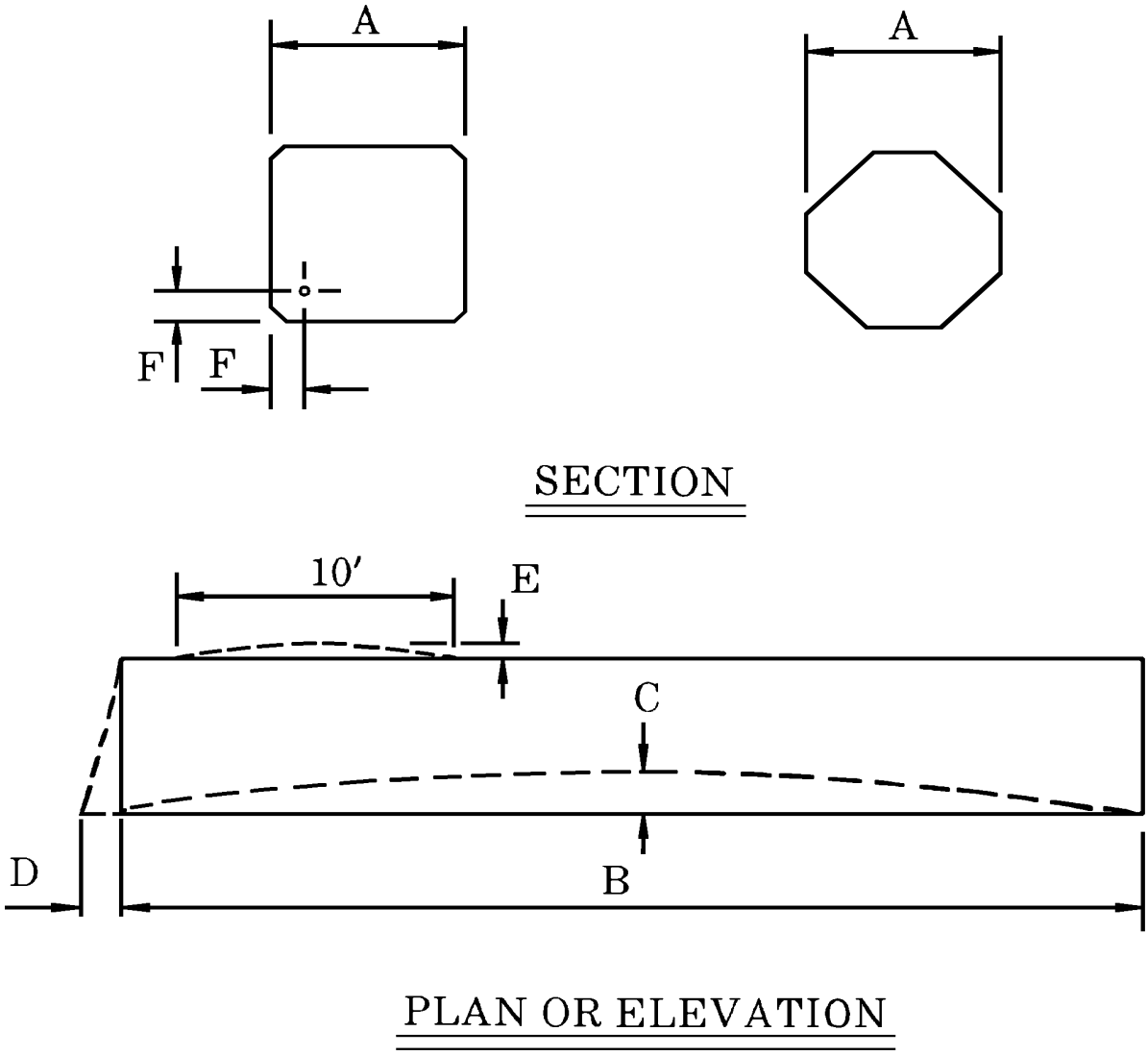

FIGURE 1078-4
PRESTRESSED SHEET PILES

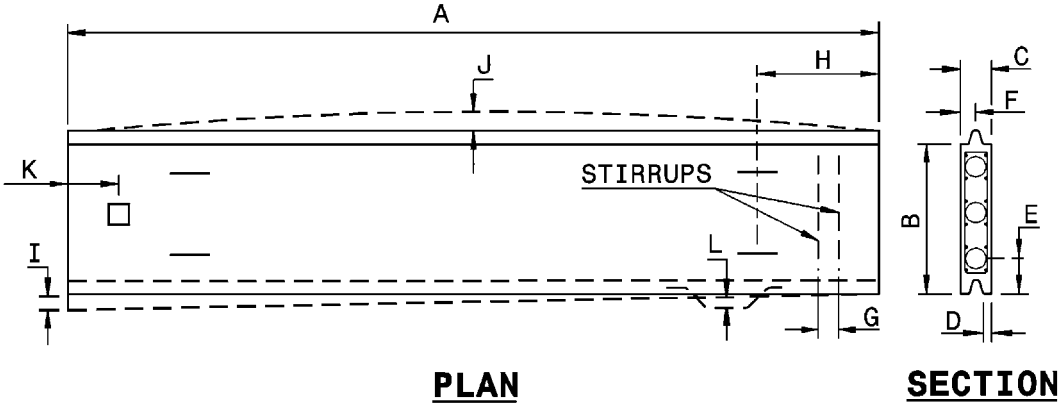

TABLE 1078-6
TOLERANCES FOR PRESTRESSED SHEET PILES

Dimension	Tolerance
Length(A)	±1"
Width(B)	±3/8"
Depth (C)	±1/4"
Position of Tendons (D)	±1/4"
Position of Voids (E)	
Longitudinal	±1/2"
Transverse	±1/2"
Vertical	±1/4"
Wall Thickness (F)	±1/2"
Longitudinal Spacing of Stirrups (G)	±3/4"
Position of Handling Devices (H)	
Longitudinal	± 6"
Transverse	±1/2"
Vertical	±1/2"
Variation from Specified End Squareness or Skew (I)	1/4" per 10' ±1/2" max.
Sweep (J)	±1/8" per 10'
Position of Blockouts (K)	±1"
Local Smoothness (L)	±1/4" per 10'

TABLE 1078-7
TOLERANCES FOR PRESTRESSED CONCRETE PANELS

Dimension		Tolerance
Length (Transverse direction to girders)		-1/4" to +1/2"
Width (Longitudinal direction to girders)		-1/8" to +1/4"
Depth		0 to +3/8"
Position of Strand	Vertical Dimension Horizontal Dimension	± 1/8" ± 1/2"

TABLE 1078-8
TOLERANCES FOR BOX BEAMS

Length (A)	± 1"
Width (overall) (B)	± 1/4"
Depth (overall) (C)	± 1/4"
Variation from specified plan end squareness or skew (D)	± 1/8" per 12" width, ± 1/2" max
Variation from specified elevation end squareness or skew (E)	± 1/8" per 12", ± 1/2" max
Sweep, for member length (F):	
up to 40 ft	± 1/4"
40 to 60 ft	± 3/8"
greater than 60 ft	± 1/2"
Differential camber between adjacent members (G):	1/4" per 10 ft., 3/4" max
Local smoothness of any surface (H)	1/4" in 10 ft
Position of strands (K)	± 1/4"
Longitudinal Position of blockout (N)	± 1"
Position of dowel holes (o1)	± 1/4”
Position of sleeves cast in beams, in both horizontal and vertical plane (o2)	± 1/2"
Position of void (P)	± 3/8”
Bearing area – deviation from plane surface	± 1/16”
Width of any one span	Plan width + 1/8” per joint

NOTE: Dimensions followed by an alphabetical suffix are shown in Figure 1078-5

FIGURE 1078-5
PRESTRESSED BOX BEAMS

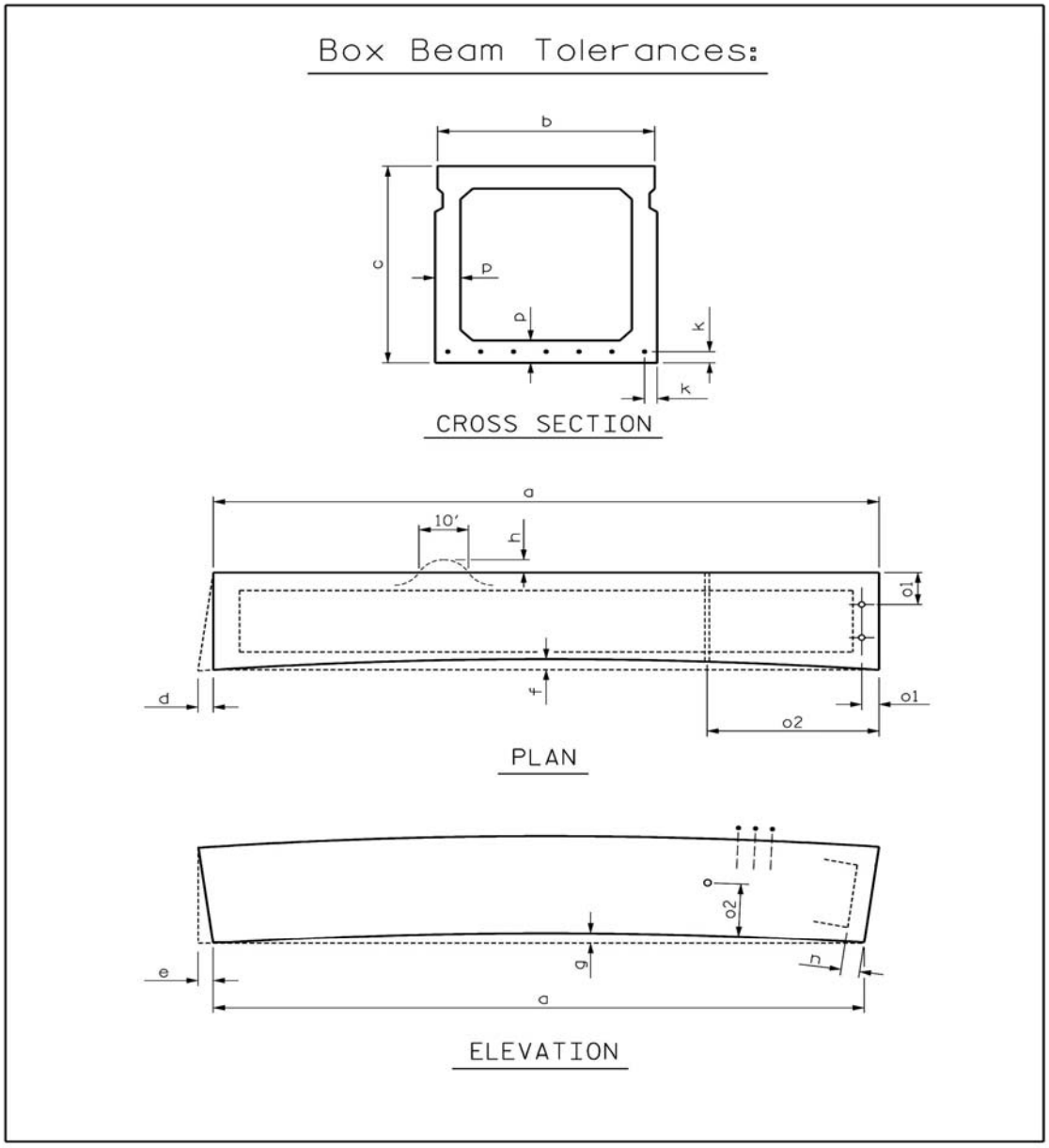

SECTION 1079
BEARINGS AND BEARING MATERIALS

1079-1 PREFORMED BEARING PADS

Provide preformed bearing pads composed of multiple layers of 8 ounce per square yard cotton duck impregnated and bound with high quality natural rubber, or equally suitable materials approved by the Engineer, that are compressed into pads of uniform thickness. Ensure that the thickness of the preformed bearing pads is 3/16" with a tolerance of plus or minus 1/16". Use cotton duck that meets the requirements of Military Specification MIL-C882-D for 8 oz./sy cotton army duck or equivalent. Provide enough pads as to produce the

required thickness after compressing and vulcanizing. Ensure that the finished pads withstand compressive loads perpendicular to the plane of the laminations of not less than 10,000 psi without detrimental extrusion or reduction in thickness.

Furnish a Type 3 certification in accordance with Article 106-3 certifying that the preformed bearing pads meet the requirements of this Specification.

1079-2 ELASTOMERIC BEARINGS

(A) General

Elastomeric bearings are either plain (consisting of elastomer only) or laminated (consisting of alternating individual layers of elastomer and non-elastic laminates) as shown on the plans. Preformed bearing pads are not required with elastomeric bearings.

Provide elastomer for bearings formulated from previously unvulcanized 100% virgin polychloroprene (neoprene) or 100% virgin natural polyisoprene (natural rubber). Mold all plain bearings individually, or cut from previously molded strips or slabs molded to the full thickness of the finished bearings, or extrude and cut to length. Ensure that the finished bearings have no voids or separations. Supply plain elastomeric bearings that are well-vulcanized, uniform, integral units of such construction that the bearing is incapable of separation by any mechanical means into separate, definite, well-defined elastomeric layers. Evidence of such layered construction either at the outer surfaces of the bearing or within the bearing is cause for rejection of such bearing shipments.

Mold all components of a laminated bearing together to form an integral unit free of voids or separations in the elastomer or between the elastomer and the non-elastic laminates. Ensure that the elastomer between the laminates is well vulcanized, uniform and integral such that it is incapable of separation by any mechanical means into separate, definite, well-defined elastomeric layers. Evidence of such layered construction, either at the outer surfaces or within the bearing, is cause for rejection of such laminated bearing shipments. Provide non-elastic steel laminates conforming to AASHTO M270 Grade 36, ASTM A570, or an approved steel equivalent. Provide outer metal laminations that are 3/16" and inner laminations that are 14 gage or 12 gage as indicated on the plans. Provide outer laminations of elastomer that are 1/4" minimum and inner laminations that are all of equal thickness as shown on the plans. Ensure a minimum cover of 1/8" of elastomer over edges of all metal laminations. Include top and bottom bearing surfaces that have an integral sealing rib a minimum of 1/8" in depth (in addition to specified total thickness) and 3/16" in width around their peripheries.

Finish cut surfaces to at least as smooth as ANSI #250 finish. Mark the batch or lot number on each bearing in such a manner as to remain legible until the acceptability of the bearing is determined by Engineer. Place a piece-mark on each bearing in such a manner as to remain legible until placement in the structure.

(B) Elastomer Properties

Use elastomer formulated from neoprene meeting the requirements shown in Table 1079-1. Use elastomer formulated from natural rubber meeting the requirements shown in Table 1079-2. Provide test specimens that are in accordance with ASTM D15, Part B.

Provide Grade 50 durometer hardness elastomer in all bearings, unless otherwise noted on the plans.

TABLE 1079-1
NEOPRENE ELASTOMER REQUIREMENTS

Grade (durometer)	50	60
PHYSICAL PROPERTIES Hardness ASTM D2240 Tensile strength, minimum psi ASTM D412 Elongation at Break, minimum percent	 50+5 -5 2500 400	 60+5 -5 2500 350
ACCELERATED TEST TO DETERMINE LONG-TERM AGING CHARACTERISTICS OVEN AGED - 70 HRS, AT 212°F ASTM D573 Hardness, points change maximum Tensile strength, % change maximum Elongation at break, % change maximum	 0 to +15 –15 –40	 0 to +15 –15 –40
OZONE: 100 PPHM in air by volume 20% strain at 100 ± 2°F ASTM D1149*100 Hours	No Cracks	No Cracks
COMPRESSION SET 22 Hrs. at 212°F ASTM D395 (Method B) % Maximum	 35	 35
ADHESION ASTM D429, B Bond made during vulcanization, lbs./in	 40	 40
LOW TEMPERATURE RESISTANCE ASTM D746, Procedure B Brittleness at -40°F	 No Failure	 No Failure
* Wipe samples with solvent before test to remove traces of surface impurities.		

TABLE 1079-2
NATURAL RUBBER ELASTOMER REQUIREMENTS

Grade (durometer)	50	60
PHYSICAL PROPERTIES Hardness ASTM D2240 Tensile strength, minimum psi ASTM D412 Elongation at Break, minimum percent	50+5 -5 2500 450	60+5 -5 2500 400
ACCELERATED TEST TO DETERMINE LONG-TERM AGING CHARACTERISTICS OVEN AGED - 70 HRS, AT 158°F ASTM D573 Hardness, points change maximum Tensile strength, % change maximum Elongation at break, % change maximum	0 to +10 -25 -25	0 to +10 –25 –25
OZONE: 25 PPHM in air by volume 20% strain at 100 ± 2°F. ASTM D1149* 48 Hours	No Cracks	No Cracks
COMPRESSION SET 22 Hrs. at 158°F ASTM D395 (Method B) % Maximum	25	25
ADHESION ASTM D429, B Bond made during vulcanization, lbs./in	40	40
LOW TEMPERATURE RESISTANCE ASTM D746, Procedure B Brittleness at -40°F	No Failure	No Failure
* Wipe samples with solvent before test to remove traces of surface impurities.		

Meet the following criteria under laboratory testing conditions of full size bearings:

Have the manufacturer proof load each laminated bearing to 150% of the maximum design dead load plus live load shown on the plans. If bulging patterns imply laminate placement that does not satisfy design criteria, or if bulging suggests poor

laminate bond, the bearing is rejected. If there are three separate surface cracks that are greater than 0.08" wide and 0.08" deep, the bearing is rejected.

Do not provide a bearing with a shear resistance, at 25% strain of the total effective rubber thickness and after an extended four-day ambient temperature of -20°F, exceeding 50 psi for 50 durometer or 75 psi for 60 durometer Table A compounds, or 30 psi for 50 durometer or 40 psi for 60 durometer for Table B compounds.

(C) Dimensional Tolerances

Provide material with a flash tolerance, finish and appearance meeting the requirements of the *Rubber Handbook, Second Edition* as published by the Rubber Manufacturers Association, Inc.: RMA-F3-T.063 for molded bearings and RMA-F2 for extruded bearings.

Permissible variation from the dimensions and configuration required by the contract is indicated in Table 1079-3.

TABLE 1079-3
Elastomer Bearing Tolerances

Overall vertical dimensions	- 0, +1/16"
Overall horizontal dimensions	- 0, +1/4"
Thickness of individual layers of elastomer (Laminated bearings only)	± 1/16"
Variations from a plane parallel to the theoretical surface	Top 1/8"
	Sides 1/4"
Edge cover of embedded laminates	- 0, +1/8"
Size of holes or slots	- 0, +1/8"
Position of holes or slots	- 0, +1/8"
Thickness of non-elastic laminates:	- 0, +1/16"

(D) Testing

Furnish all bearings that are produced by a bearing manufacturer who previously submitted the required pre-qualification test samples and certifications and whose elastomer formulation is initially approved for use by the Engineer. Obtain approval from the Engineer for each elastomer formulation produced by a manufacturer prior to its first use on Department projects. To pre-qualify and obtain initial approval of a particular formulation, have the bearing manufacturer submit to the Engineer, well in advance of anticipated use of the product, certified test results showing actual test values obtained when the physical properties of the elastomer are tested for compliance with the pertinent Specifications.

In addition, have the manufacturer forward pre-qualification test samples to the Engineer for testing and evaluation of compliance with pre-qualification requirements. Include in the pre-qualification samples at least two finished bearings typical of the formulation and workmanship intended for use on Department projects.

Have the bearing manufacturer certify that all of the samples submitted are of the same basic elastomer formulation and of equivalent cure to that used in the finished products furnished on Department projects.

If required, have the producer perform the complete pre-qualification testing procedure again during later production if the Engineer feels such action is appropriate.

After pre-qualification approval, inspect, sample and test actual bearing production as outlined below:

Have the manufacturer furnish certified laboratory test results on the elastomer properties of each batch or lot of compound used in the manufacture of bearings, both plain and laminated. Submit one sample bearing for each batch or lot of compound for verification testing.

SECTION 1080
PAINT AND PAINT MATERIALS

1080-1 GENERAL

Deliver all paints except two component products to the project completely mixed and ready for use without additional oil or thinner. Mix two component paints in accordance with the manufacturer's printed instructions and shall not need additional oil or thinner upon mixing, except where necessitated by weather conditions. Mixed paints or paint components that harden or curdle in the container and will not break up with a paddle to form a smooth, uniform consistency will be rejected. Any thinning necessitated by weather conditions shall be approved in writing and use only those thinners approved by the manufacturer. Store all paint materials in a moisture free environment between 40°F and 110°F or at such temperatures within this range recommended by the manufacturer.

1080-2 PAINT VEHICLES, THINNERS, AND DRIERS

Paint vehicles, thinners, and dryers shall meet the requirements for these ingredients that are included in the Specifications for the paint being used. Only ingredients recommended by the manufacturer which have a history of compatibility with each other may be used.

1080-3 PACKING AND MARKING

Ship paint and paint materials in strong, substantial containers, that are properly labeled and plainly marked with the weight, color, and volume in gallons of the paint content; a true statement of the percentage composition of the pigment; the proportions of pigment to vehicle; and the name and address of the manufacturer. Any package or container not so marked as described above or exceeding 5 gallons total volume will not be accepted for use.

1080-4 INSPECTION AND SAMPLING

Inspection and sampling will be made at the point of manufacture wherever possible. The right is reserved to sample all paint, either at the destination or at the point of origin, and to withhold acceptance of the paint until analysis of such samples have been made.

Use only pre-qualified inorganic zinc paint manufactured in accordance with the requirements shown below.

Have the paint manufacturer submit the following at the same time to the State Materials Engineer:

(A) A minimum one quart sample of each component of paint including the manufacturer's name, location, product name, mixing instructions, batch number, and MSDS information.

(B) A minimum of three panels prepared as specified in 5.5.10 of AASHTO M-300, Bullet Hole Immersion Test.

(C) A certified test report from an approved Independent Testing Laboratory for the Salt Fog Resistance Test and Cyclic Weathering Resistance Test specified in 5.5.8 and 5.5.9 of AASHTO M-300, respectively.

(D) A certified report from an approved Independent Testing Laboratory that the product has been tested for Slip Coefficient and meets the requirements set forth for AASHTO M253 Class B.

Use the same batch of paint for all samples and panels. The Independent Testing Laboratory Report may be for a typical batch of the same product. Submit samples and reports for qualification at least 30 days in advance of anticipated need. Once qualified, a product will be placed on North Carolina's approved list for a period of 5 years unless the formulation of the product or manufacturing process is changed, in which case the product shall be requalified before use.

The Materials and Tests Unit will conduct all tests of paints in accordance with the latest test methods of the American Society for Testing and Materials, Federal Test Method Standard No. 141, and various other methods in use.

1080-5 RED PRIMER PAINT

(A) SCOPE

This Specification covers a long oil-alkyd primer paint for use on steel surfaces blast-cleaned to a SSPC SP-6 finish. The paint may be applied by brushing or spraying to a wet film thickness of approximately 3 wet mils per coat.

(B) MATERIALS

Materials shall be as specified herein. Materials not specified shall be selected by the supplier and will be subject to all of the requirements of this Specification. Use paint made of materials that are not toxic to personnel under normal conditions of use and which contain no more than 2.8 pounds per gallon volatile organic compounds.

(1) PAINT CHARACTERISTICS

	MINIMUM	MAXIMUM
Pigment % by weight	53	55
Vehicle % by weight		47
Weight per gallon	12.9 lbs.	
Solids % by volume	67.0	
Fineness of grind Hegman units	4.5	
Moisture content % by weight		0.5
Skinning hrs (3/4 vol. in closed container)	48	
Viscosity	85 KU	95 KU
Drying time, set to touch		6 Hrs
Drying time, dry through		18 Hrs
* Adhesion at 14 days (ASTM D-3359)	3B	
Volatile Organic Compounds per Gallon		2.8 lbs.

(2) PIGMENT COMPOSITION (% by weight)

	MINIMUM	MAXIMUM
Zinc Hydroxy Phosphite ASTM D-4462-85	73	
Red Iron Oxide (86% Fe2O3)	24	
Organo Montmorillonite		1

(3) VEHICLE COMPOSITION (% by weight)

	MINIMUM	MAXIMUM
Non-Volatile	62	
Alkyd resin solids Fed. Spec TT-4-266, Type 1, Class A	40	
Linseed oil (ASTM D-234)	20	
Linseed oil to Alkyd ratio	1.2	
Thinner and Dryer Thinner: Fed. Spec. TT-T291, Type 2 Gr. A Dryer: Fed. Spec. TT-D-643B	38	

* Prepare the specimen for the adhesion test by applying two dry mils of the coating to a standard *Q* panel.

1080-6 ALKYD FINISH PAINT

(A) SCOPE

This Specification covers a gray, long oil-alkyd primer paint for use over surfaces coated with Red Alkyd Primer Paint. The paint may be applied by brushing or spraying to a wet film thickness of approximately 3 wet mils per coat.

(B) MATERIALS

Materials shall be as specified herein. Materials not specified will be selected by the supplier and be subject to all of the requirements of this Specification. Use paint

made of materials which are not toxic to personnel under normal conditions of use and which contain no more than 3.5 pounds per gallon volatile organic compounds.

(1) Paint Characteristics

	MINIMUM	MAXIMUM
Pigment % by weight	47	
Vehicle % by weight		54
Weight per gallon	11.0 lbs.	
Solids % by volume	54.0	
Fineness of grind Hegman units	6.0	
Moisture content % by weight		0.5
Skinning hrs (3/4 vol. in closed container)	48	
Viscosity	90 KU	100 KU
Drying time, set to touch		6 Hrs.
Drying time, dry through		18 Hrs.
* Adhesion at 14 days (ASTM D-3359)	3B	
Volatile Organic Compounds per Gallon		3.5 lbs.
Lead Content % by Weight Dry Film		0.05
Color (Federal Color Standard 595)	26622 (Gray)	

(2) Pigment Composition (% by weight)

	MINIMUM	MAXIMUM
Zinc Hydroxy Phosphite ASTM D-4462-85	20	
Titanium Dioxide ASTM D476 TY-II	50	
Magnesium Silicate	15	
Tinting and Inert Pigments		12

(3) Vehicle Composition (% by weight)

	MINIMUM	MAXIMUM
Non-Volatile	62	
Alkyd resin solids Fed. Spec. TT-4-266, Type 1, Class A	40	
Linseed oil (ASTM D-234)	20	
Linseed oil to Alkyd ratio	1.2	
Thinner and Dryer Thinner: Fed. Spec.TT-T291, Type 2 Gr. A Dryer: Spec. TT-D-643B	38	

* Prepare the specimen for the adhesion test by applying two dry mils of the coating to a standard *Q* panel.

1080-7 SELF-CURING INORGANIC ZINC PAINT

Use a self curing inorganic zinc paint meeting the requirements of a Type I Inorganic Zinc Primer paint specified in AASHTO M-300 and:

(A) Use mixed paint with zinc content of not less than 72 percent by mass of the total solids.

(B) The Slip Coefficient meets the requirements set forth for AASHTO M253 Class B.

(C) The elcometer adhesion when performed in accordance with ASTM D-4541 shall be no less than 400 psi.

(D) Cure the paint to meet the solvent rub requirements in ASTM D 4752.

(E) Formulate the paint so as to produce a distinct contrast in color with the blast cleaned metal surfaces and with the finish paint.

1080-8 COAL TAR EPOXY PAINT

Use coal tar epoxy paint meeting the requirements of Steel Structures Painting Council SSPC Paint 16.

1080-9 ORGANIC-ZINC REPAIR PAINT

Use organic-zinc repair paint meeting the requirements of SSPC Paint 20 Type II, or Federal Specification TT-P-641. Organic-zinc repair paint is not tinted and is applied 3 – 4 wet mils of paint per coat. Do not use zinc paint in aerosol spray cans.

1080-10 WASH PRIMER PAINT

Use wash primer paint meeting the requirements of Society of Protective Coatings SSPC Paint 27.

1080-11 BLANK

1080-12 WATERBORNE PAINTS

(A) Paints

(1) Waterborne Primer Paints The chemical requirements of the brown and white primer paints are specified in Tables 1080-1(A) through (D). Use primer paints on roughened steel surfaces cleaned to an SSPC SP-6 finish. Two coats of paint are required to form an effective primer coat. The first coat is brown and the second is white. Each coat is applied at a wet film thickness of approximately 6 mils.

(2) Waterborne Finish Paints The chemical requirements of the gray and green finish paints are specified in Tables 1080-2(A) through (D). Apply finish paints over compatible primer paints. Apply either one or two coats at a wet film thickness of approximately 6 mils each to produce an effective finish coat.

(B) Description

(1) The acrylic paints furnished in accordance with this Specification are one component products made from acrylic resins with sufficient additives, coalescing agents, solvents and pigmentation to produce a durable paint with a volatile organic compound (VOC) content less than 2.0 lb./gal.

(2) These products are intended for brush, roller or spray application applied in accordance with *SSPC-PA 1, Shop, Field and Maintenance Painting*.

(C) Composition

(1) Use ingredients and proportions as specified in Tables 1080-1(A) through (D) and 1080-2(A) through (D).

(2) Provide raw materials based on the specified ingredients that are uniform, stable in storage, and free from grit and coarse particles. Do not use rosin or rosin derivatives. Beneficial additives such as anti-skinning agents, suspending agents, or wetting aids are allowed.

(D) Properties

(1) Use both Type I and II paints that meet the requirements of Tables 1080-1(A) and (D) and 1080-2(A) through (D) and of Sections 5.2 - 5.8.

(2) Odor

Normal for the materials permitted (ASTM D 1296).

(3) Color

(a) Waterborne Primer Paint

The color before and after weathering when compared with Fed. Std. 595B is Brown #30045 for Type I (See Note 10.2). There are no color requirements for the White Primer.

(b) Waterborne Finish Paint

The colors before and after weathering when compared with Fed. Std. 595B are Green #24108 for Type I and Gray #26622 for Type II. (See Note 10.2)

(4) Working Properties

Use a paint that is easily applied by brush, roller, or spray when tested in accordance with Fed-Std - 141, Methods 4321, 4331, and 4541. Ensure that the paint shows no streaking, running, or sagging during application or while drying.

(5) Condition In Container

Ensure that the paint shows no thickening, curdling, gelling, or hard caking when tested as specified in Fed-Std - 141, Method 3011, after storage for six months from the date of delivery, in a full, tightly covered container, at a temperature of 50 - 110° F.

(6) Skinning

No skinning is allowed in a three-quarters filled closed container after 48 hours when tested in the standard manner specified in Fed-Std - 141, Method 3021.

(7) Salt Contamination

Minimize the content of salt contamination by the incorporation of only high purity materials. Ensure that the specific resistance of the aqueous leachate of

the composite of the pigments in required proportions is a minimum of 5,000 ohm-cm when tested in accordance with ASTM D 2448.

(8) Early Rust Resistance

Provide each type of paint that meets the early rust requirements specified in Materials and Tests Standards CLS-P-1.0.

(9) Directions For Use

Supply the following directions for use with each container of paint:

Waterborne primer paint is intended for use as a primer over rough, bare structural steel. It is not intended for use over other paint systems. Waterborne finish paint is intended for use as a topcoat over a compatible primer in atmospheric exposure. Mix the paint thoroughly before use. For roller, brush, or airless spray application, no thinning should be necessary. A minimum amount of thinning may be necessary for conventional air spray. Apply by brush or spray to the specified film thickness or, if none is specified, to at least 2 mils dry or approximately 6 mils wet. Dry the surface to be painted and ensure that the surface temperature is a least 5° F above the dew point, the humidity is less than 85%, and the temperature of the air is over 50° F. Do not paint outdoors in rainy weather or if freezing temperatures are expected before the paint dries. Allow the paint at least 24 hours drying time before recoating.

(E) INSPECTION

(1) All materials supplied under this Specification are subject to random inspection by the Department. The Department has the right to reject any materials supplied that are found to be defective in accordance with Articles 105-3 and 106-9.

(2) Supply samples of any or all ingredients used in the manufacture of this paint, along with the supplier's name and identification for the material when requested.

(F) VOLATILE ORGANIC COMPOUND (VOC) CONTENT

Ensure that the VOC content after formulation (but before thinning) complies with the VOC limit for the applicable coatings category per Federal regulations. Make the coating specifier aware that more stringent state or local regulations may reduce the maximum VOC content permitted for coatings applied in a specific locality.

(G) COLOR VARIATION

A color variation of 5 delta e units from the specified color shall be acceptable. After three months weathering the color shall not vary more than 5 delta e units from the original color value.

TABLE 1080-1(A)
ANALYSIS FOR WATERBORNE PRIMER PAINTS

	REQUIREMENTS		
CHARACTERISTICS	**Min Wt %**	**Max Wt %**	**ASTM**
Pigment Content Type I (Brown) Type II (White)	 20 35	 25 40	D 3723
Volatiles Type I (Brown) Type II (White)	 - -	2.0 lbs./gal	D 2369
Coarse particles and skins, as retained on standard 325 mesh screen	-	0.5	D 185
Rosin or rosin derivatives	-	0	D 1542

TABLE 1080-1(B)
COMPOSITION OF WATERBORNE PRIMER PAINTS

	TYPE I	**BROWN**	**TYPE II**	**WHITE**	**TEST METHODS**
PIGMENTS	Wt % Min	Wt % Max	Wt % Min	Wt % Max	ASTM/Federal/State
Major Pigments	20	25	35	40	D 3723
Calcium Carbonate		-	30		D 1159
Magnesium Silicate				12	D 605
Titanium Dioxide		-	45	-	D 476, Type II
Zinc Phosphate	10	-	10	-	NCDOT M&T P-10
Iron Oxide	45				ASTM D 3721
Tinting Pigments					
Lamp Black		-	2%	-	ASTM D 209
Phthalocyanine Pigments				2%	ASTM D1135 & D3256
Acid Soluble Pigments[1]	-	-	-	0	
Lead	-	0.005	-	0.005	

TABLE 1080-1(C)

VEHICLE	Wt % Min	Wt % Max	Wt % Min	Wt % Max	**TEST METHODS**
Total Vehicle	73	80	60	65	NCDOT M&T P-10
HG-56 [3] Solids	30	-	30	-	
Water	-	55	-	55	
Methyl Carbitol	5	-	5	-	
Texanol	2	-	2	-	

1. Use a 5% acetic acid solution with a pH 4 $\pm$ 2 to determine solubility.
2. Do not use chrome green.
3. Or approved equivalent.

TABLE 1080-1(D)
PROPERTIES OF WATERBORNE PRIMER PAINTS

CHARACTERISTICS	R E Q U I REMENTS		ASTM/FEDERAL
	MIN	MAX	
Consistency* Sheer Rate 200 r/min Ounces Krebs units	 255 3.2	 350 3.5	D 562
Density, lb./US gal Type I (Brown) Type II (White)	 9.7 11.0	 - -	D 1475
Fineness of Grind, Hegman Units	5.0	-	D 1210
Drying Time, Hours Tack Free Dry Hard	 - -	 3 24	D 1640
Flash Point, ^{o}F	Report Value	Report Value	D 3278
Early Rust	9	-	Section 5.8
Leneta Sag Test	10+		
Gloss, Specular @ 60 degrees	Report Value	Report Value	
pH	8.0	8.5	
Adhesion (1)	4B		D 3359
Color Type I (Brown) Type II (White)	FED-STD 595B 30045 NA		D 2244

(1) Prepare the specimen for adhesion by applying 2 dry mils of coating to a 3”x 5”x 0.25” steel panel cleaned to a minimum SSPC SP-6 finish with a 1.7 $\pm$ 0.5 mil profile.
* Consistency 48 hours or more after manufacture.

TABLE 1080-2(A)
ANALYSIS FOR WATERBORNE FINISH PAINTS

	REQUIREMENTS		
CHARACTERISTICS	Min Wt %	Max Wt %	ASTM
Pigment Content Type I (Green) Type II (Gray)	 13 13	 17 17	D 3723
Volatiles Type I (Green) Type II (Gray)	 - -	2.0 lbs./gal	D 2369
Coarse particles and skins, as Retained on standard 325 mesh screen	-	0.5	D 185
Rosin or rosin derivatives	-	0	D 1542

TABLE 1080-2(B)
COMPOSITION OF WATERBORNE FINISH PAINTS

	TYPE I	GREEN	TYPE II	GRAY	TEST METHODS
PIGMENTS	Wt % Min	Wt % Max	Wt % Min	Wt % Max	ASTM/Federal/State
Major Pigments	13	17	13	17	D 3723
Calcium Carbonate		-			D 1159
Magnesium Silicate					D 605
Titanium Dioxide	5	-	70	-	D 476, Type II
Zinc Phosphate	10	-	10	-	NCDOT M&T P-10
Tinting Pigments					
Lamp Black					ASTM D 209
Phthalocyanine Green	0	-	0	-	ASTM D 3021
Red Iron Oxide					ASTM D 3721
Yellow Iron Oxide					ASTM D 768
Acid Soluble Pigments[1]	-	-	-	0	
Lead	-	0.005	-	0.005	

TABLE 1080-2(C)

VEHICLE	Wt % Min	Wt % Max	Wt % Min	Wt % Max	TEST METHODS
Total Vehicle	83	87	83	87	NCDOT M&T P-10
HG-56 [3] Solids	30	-	30	-	
Water	-	58	-	58	
Methyl Carbitol	5	-	5	-	
Texanol	4	-	4	-	

1. Use a 5% acetic acid solution with a pH 4 $\pm$ 2 to determine solubility.
2. Do not use chrome green.
3. Or approved equivalent.

TABLE 1080-2(D)
PROPERTIES OF WATERBORNE FINISH PAINTS

	REQUIREMENTS		
CHARACTERISTICS	**MIN**	**MAX**	**ASTM/FEDERAL**
Consistency* Sheer Rate 200 r/min			D 562
Grams	255	350	
Krebs units	90	100	
Density, lb./US gal			D 1475
Type I (Green)	9.35	-	
Type II (Gray)	9.35	-	
Fineness of Grind, Hegman Units	5.0	-	D 1210
Drying Time, Hours			D 1640
Tack Free	-	3	
Dry Hard	-	24	
Flash Point, ^{o}F	Report Value	Report Value	D 3278
Early Rust	9	-	Section 5.8
Leneta Sag Test	10+		
Gloss, Specular @ 60 degrees	40		
pH	8.0	8.5	
Adhesion (1)	4B		D 3359
Color	Fed-Std 595B		
Type I (Green)	24108		D 2244
Type IB(NC Green)	24272		
Type II Gray)	26622		

(1) Prepare the specimen for adhesion by applying 2 dry mils of coating to a 3”x 5”x 0.25” steel panel cleaned to a minimum SSPC SP-6 finish with a 1.7 $\pm$ 0.5 mil profile.
*Consistency 48 hours or more after manufacture.

1080-13 BLANK

1080-14 PAINT FOR VERTICAL MARKERS

For vertical markers, use a waterborne acrylic or alkyd type material meeting the following requirements:

(A) Color...Federal Color Std. 595 ……# 27040 Black or # 13538

(B) Adhesion to Substrate (ASTM D3350) …… 3A Min.

Apply sufficient paint to completely cover the color of the underlying substrate along with any surface imperfections.

1080-15 ABRASIVE MATERIALS FOR BLAST CLEANING STEEL

Select the gradation of the abrasive to impart the anchor profile specified.

Alternative A - Expendable Abrasive

Use blasting abrasives with a suitable steel or mineral abrasive which contain no more than 100 ppm of any corrosive compound such as sulfate or chloride or 100 ppm of any EPA characteristic waste compound such as lead, chromium, or arsenic.

Alternative B - Recyclable Steel Grit

Use abrasives that when sampled at any time during the blasting process, contain no more than 100 ppm of any corrosive compound such as sulfate or chloride or 1000 ppm of any EPA characteristic waste compound such as lead, chromium or arsenic. Maintain the size and shape of the abrasive to impart the specified profile.

1080-16 FIELD PERFORMANCE AND SERVICE

Do not use paint products inspected by the Engineer and found to exhibit poor performance in similar North Carolina environments. *Poor performance* is defined as any coating failing to meet ASTM D610, Grade 5, or having greater than 3% rusting or disbonding before attaining 5 years of service.

SECTION 1081
EPOXY AND ADHESIVES

1081-1 EPOXIES - GENERAL

The types of epoxies and their uses are as shown below:

Type 1. A low-modulus, non-sag gel adhesive used to bond or repair damp, vertical, or overhead surfaces. Typical applications include walls, concrete foundations, concrete pipe, conduit, and ceilings.

Type 2: A low-modulus, general-purpose adhesive used in epoxy mortar repairs and broadcast sand sealing operations. Bridge Maintenance uses it as both a primer coat and thickness-building second coat in two-stage sand broadcast operations to seal and skid-proof bridge decks. As a repair material, it may be used to patch spalled, cracked, or broken concrete where vibration, shock, or expansion and contraction is expected. Feather-edged patching is not recommended with this material; instead, the adjacent concrete perimeter should be sawed at least 1/4" to 1/2" deep and any remaining concrete chipped away to provide a vertical interface between the epoxy mortar and concrete.

Type 3. A high-modulus general-purpose adhesive used to bond plastic concrete or hardened concrete to hardened concrete or other structural materials. It may also be used to produce a high-strength epoxy mortar grout bed for equipment or to patch interior spalls, cracks, or broken concrete. It is not recommended for exterior patching because its rate of thermal expansion and contraction differs too greatly from concrete. It may be used for anchoring bolts where a flowable adhesive is required.

Type 3A. A gel-like version of Type 3, used specifically for embedding dowel bars, threaded rods, rebars, and other fixtures in hardened concrete. The manufacturer shall submit test results showing that the bonding system will obtain 125% of the specified yield strength of the anchor fixture in concrete with a minimum compressive strength of 3000 psi. Plans may call for field testing of adhesively anchored fixtures.

Type 4A. A gray protective coating for concrete, wood, steel and other structural materials. It is typically used as a topcoat in waterproofing concrete exposed to splash zones and tidal water.

Type 4B. A red primer coating used with Type 4A.

Type 5. A high modulus, low viscosity adhesive suitable for pressure injection into cracks in concrete. For some non-structural crack repairs, Type 5 epoxy may be poured on the surface to penetrate cracks by gravity. This may be beneficial before waterproofing and skid proofing.

Type 6A. An adhesive for bonding raised traffic markers to concrete or asphalt surfaces. Part A shall be pigmented white, Part B black so that when the components are combined a uniform gray color results.

Type 6B. A normal-setting self-leveling adhesive for bonding traffic markers in recessed areas on concrete and asphalt. Type 6A color requirements apply.

Type 6C. A rapid-setting adhesive for bonding traffic markers to concrete and asphalt surfaces. Type 6A color requirements apply.

1081-2 SPECIFICATIONS FOR USE OF EPOXIES

(A) Supply

Supply epoxy resin in two components, labeled as Component A -- Contains Epoxy Resin and Component B -- Contains Curing Agent, for combining immediately prior to use in accordance with the manufacturer's instructions. Mark each container with the manufacturer's name, NCDOT type, lot or batch number, quantity, date of manufacture, shelf life or expiration date, color, mixing instructions, usable temperature range, and hazards or safety precautions.

Furnish the two components in separate non-reactive containers. Provide containers of such size that the proportions of the final mix can be obtained by combining a single container of one component with one or more whole containers of the other component.

(B) Acceptance

The Materials and Tests Unit maintains an approved list of epoxies identified by brand name and Department type. When materials on this list are furnished to a project, submit to the Engineer a Type 1, Certified Mill Test Report for each lot or batch. Materials not on this list shall be tested by the Department prior to use, in which case the manufacturer shall furnish samples and a Type 1 certification to the Materials and Tests Unit. The sample size for a 1:1 mix ratio will be one gallon per component; for different mix ratios, the sample size of the greater component will be increased proportionally. When materials are furnished to the Bridge Maintenance Unit, the terms of acceptance will be listed in the bid solicitation. The Engineer reserves the right to reject any epoxy that does not perform adequately in the field.

(C) Fillers, Pigments, and Thixotropic Agents

All integral fillers, pigments, and thixotropic agents shall be fine enough to not separate, settle, or cause skinning during storage of the epoxy components. Do not

use abrasive fillers such as alumina and silica flour. Do not use solvents. When mineral fillers are to be added during mixing, they shall be inert, readily dispersible, and, except for sand, have fineness such that 99% of the material will pass a No. 325 sieve.

(D) Shelf life

The shelf life of parts A and B shall be a minimum of 1 year from the date of manufacture.

1081-3 NOTES ON USE OF EPOXIES

(A) Moisture Conditions

Types 1 - 5 are moisture insensitive and can be applied on clean, dry, or damp surfaces free of standing water.

(B) Coefficient of Expansion

The coefficient of expansion of cured epoxy is 6 times greater than that of concrete. Therefore, to reduce spalling and peeling during temperature changes, avoid thick layers of pure epoxy. A 4:1 by weight sand-epoxy mortar has approximately the same coefficient of expansion as concrete.

(C) Safety

Epoxies can irritate the eyes, skin, and respiratory tract. Therefore, wear chemical splash goggles, chemically-resistant gloves, and protective clothing and boots when handling epoxies. Respiratory protection is usually not needed if epoxies are mixed and applied in well-ventilated areas, but avoid prolonged breathing of vapors. Follow all Material Safety Data Sheet instructions for proper use of these materials.

(D) Mixing

Stir parts A and B individually until each component is homogeneous. Use a separate stirrer for each component.

Combine parts A and B, either by weight or volume, as specified in the manufacturer's instructions. Stir the mixture vigorously, periodically scraping the sides and bottom of the container. Small quantities of epoxy usually require 2-3 minutes to mix homogeneously; 5-gallon quantities can take up to 10 minutes of mixing.

Temperature affects the viscosity and pot life of epoxies. Most laboratory tests are conducted at 77°F. Higher temperatures render epoxies thinner and faster setting; lower temperatures induce higher viscosities and longer pot lives.

Add sand or other fillers to liquid epoxies only after parts A and B have been thoroughly mixed. Stir in the sand or filler until all particles are completely coated.

(E) Storage and Substrate Temperature

Store epoxies at temperatures between 50°F and 90°F. Epoxy components exposed to the extremes of this range or outside this range should be conditioned to 77°F

before mixing and blending. If heat is necessary, always use indirect methods such as hot water, a heated room, or a microwave oven to condition components.

When applying epoxy to a cold substrate, preheat the components approximately 1°F above 77°F for every 2°F of substrate temperature below 77°F.

Seal previously opened containers to be airtight. Unsealed containers can absorb moisture from the atmosphere, which can alter the chemical reaction of the mixture.

1081-4 TEST METHODS FOR EPOXIES

(A) Viscosity

Determine the viscosity of the mixture in accordance with ASTM D 2669, using Brookfield viscometer model RVT. Use the spindle number and speed shown in Table 1081-1.

(B) Pot Life

Determine the pot life of the mixture in accordance with AASHTO T 237 except use a mass of 60 + or - 0.4g.

(C) Compressive Strength of Epoxy Mortar

Determine the compressive strength of epoxy mortar in accordance with ASTM C 109 except as follows:

Use mortar consisting of one part epoxy and three parts standard graded Ottawa sand except for Types 1 and 3A, which shall be tested neat. Mix epoxy components A and B at the recommended proportions for 2 minutes, add the sand, and mix for 3 minutes. Pour the mortar into the cube molds in 2 layers, and tamp each layer 50 times with a spatula and 25 times with a hammer handle. Make 6 specimens, and cure all in air at 77 + or - 2°F for 24 hours. Test 3 specimens for compressive strength at the end of this curing period. Immerse the remaining 3 specimens in water at ± 77°F for 6 days, after which immediately test them for compressive strength in the wet condition.

(D) Volatiles Content

Determine the percentage of volatiles in the mixture in accordance with ASTM D 1078.

(E) Ash Content

Determine the ash content of the mixture in accordance with ASTM D 482.

(F) Tensile Strength and Tensile Elongation

Determine the tensile strength and tensile elongation of the mixture in accordance with ASTM D 638.

(G) Hardness

Determine the Shore D hardness of the mixture at 24 hours and 7 days in accordance with ASTM D 2240.

(H) Absorption

Determine the water absorption of the mixture in accordance with ASTM D 570.

(I) Bond Strength

Determine the bond strength of the moist-cured mixture at 14 days by the slant shear test, ASTM C 882.

1081-5 PROPERTIES OF EPOXIES

Epoxies shall conform to the requirements shown in Table 1081-1.

1081-6 POLYESTER RESIN EPOXY ADHESIVE

(A) General

Polyester resin is used specifically for embedding dowel bars, threaded rods, rebars, and other fixtures in hardened concrete.

Have the manufacturer submit test results showing that the bonding system will obtain 125% of the specified yield strength of the anchor fixture in concrete with a minimum compressive strength of 3000 psi. Field testing may be required for adhesively anchored fixtures.

(B) Materials

Package components of the adhesive in containers of such size that one whole container of each component is used in mixing one batch of adhesive. Use containers of such design that all of the contents may be readily removed, and are well sealed to prevent leakage. Furnish adhesive material that requires hand mixing in two separate containers designated as Component A and Component B. A self contained cartridge or capsule will consist of two components which will be automatically mixed as they are dispensed, as in the case of a cartridge, or drilled into, as in the case of a capsule.

Clearly label each container with the manufacturer's name; date of manufacture; batch number; batch expiration date; all directions for use and such warning of precautions concerning the contents as may be required by State or Federal Laws and Regulation.

(C) Mixing of Adhesive

Mix adhesive in strict conformance with the manufacturer's instructions.

1081-7 HOT BITUMEN

The adhesive shall be an asphaltic material with a homogeneously mixed filler and comply with the following requirements:

(A) Physical Requirements

(1) Adhesive Properties determined on the asphaltic material with filler.

	MIN.	MAX.	TEST METHOD
Softening point, °F.	200	--	ASTM D 36
Penetration, 100 g., 5 sec., 77 °F	10	18	ASTM D 5
Flow, Inch	--	0.2	ASTM D 5329 (as modified in test methods)
Viscosity, 400 °F, Poises	--	75	ASTM D 2669 or D 4402 (as modified in test methods)
Flash Point, C.O.C., °F.	550	--	ASTM D 92

(2) Asphalt Properties determined on the filler-free material derived from the extraction and Abson recovery process as explained in Test Methods.

	MIN.	MAX.	TEST METHOD
Penetration, 100 g., 5 sec., 77 °F	25	--	ASTM D 5
Viscosity, 275 °F Poises	12	-100	ASTM D 2171
Viscosity Ratio, 275 °F	2.2		(as explained in test methods)

(3) Filler Properties determined using the filler separation techniques described in Test Methods.

	MIN.	MAX.	TEST METHOD
Filler Content, % by weight,	65	75	(as described in test methods)
Filler Fineness, % passing			ASTM C 430
No. 325	75		(as modified
No. 200	95		in test
No. 100	100		methods)

(B) Test Methods

(1) Flow

Determine flow according to Section 6, Flow, of ASTM D 3407 with the exception that the oven temperature shall be 158 ± 2 °F and sample preparation done according to Section 7.1 of ASTM D 5.

(2) Viscosity

Viscosity is to be determined according to ASTM D 2669 using a spindle speed of 10 rpm. Heat the adhesive to approximately 410°F and allowed to cool. Determine viscosity at 400 ± 1°F.

(3) Asphalt Properties

Properties of the base asphalt are to be determined on the material obtained from the following extraction and Abson recovery methods. Extract the asphalt by heating the adhesive just to the point where it will easily flow and then transfer 125 to 150 grams into 400 ml of trichloroethylene with a temperature of 125°F to 150°F to 66°C). Thoroughly stir this mixture to dissolve the asphalt. Decant the trichloroethylene-asphalt mixture decanted and the asphalt recovered using the Abson recovery method, ASTM D 1856 as modified by the following. The extraction methods of ASTM D 2711 do not apply and there will be no filtration of the solvent asphalt mixture. The extraction solution of trichloroethylene and asphalt shall be centrifuged for at least 30 minutes at 770 times gravity in a batch centrifuge. Decant this solution in the distillation flask, taking care not to include any filler sediment. Apply heat and bubble carbon dioxide solution slowly to bring the solution temperature to 300°F. At this point the carbon dioxide flow is increased to 800 to 900 ml per minute. The solution temperature is maintained at 320°F to 335°F with this carbon dioxide flow for at least 20 minutes and until the trichloroethylene vapors have been completely removed from the distillation flask. Repeat the above extraction-recovery method as necessary to obtain the desired quantity of asphalt. Use the asphalt recovered to determine penetration, 275°F viscosity, and 275°F viscosity ratio.

(4) Viscosity Ratio

Determine the 275°F viscosity ratio by comparing the 275 °F viscosity on the base asphalt before and after the Thin-Film Oven Test. Perform the Thin-Film Oven Test as in ASTM D 1754. Determine the specific gravity by pycnometer as in ASTM D 70 for use in the Thin-Film Oven Test. Calculate the 275°F viscosity ratio by dividing the viscosity after the Thin-Film Oven Test by the original 275°F viscosity.

(5) Filler Material

Separate the filler material from the asphalt to determine Filler Content and Filler Fineness. Determine the portion by weight of the adhesive insoluble in 1,1,1-trichloroethane by weighing 10.00 ± 0.01 grams of solid adhesive into a centrifuge flask with approximately 100 ml volume such as that specified in ASTM D 1796. Add 50 ml of 1,1,1-trichloroethane to the adhesive, which should be broken up in small pieces in order to speed up the dissolution solids. Place the sample flask in a balanced centrifuge and spin using a minimum relative centrifugal force of 150 (as determined in Section 6 of ASTM D 1796) for 10 minutes. Remove the sample flask and decant the solid, taking care not to lose any solids. Repeat the application of solvent and centrifuging until the solvent becomes clear and the filler is visually free of asphalt. Dry the filler at 160 ± 5°F to remove solvent and weigh the resulting filler. Filtration of the decanted solvent may be performed to verify there is no loss of filler. Percent filler content is calculated as follows:

$$\text{Filter Content, \% by weight} = \frac{\text{(Filler, Wt, gm.) (100)}}{\text{Original Adhesive Wt., gm.}}$$

Determine Filler Fineness according to ASTM C 430 using number 325, 200 and 100 sieves. This method is to be modified by using a water soluble non-ionic wetting agent, such as Triton X-100, to aid the wetting action. Concentration of the surfactant solution shall be approximately 1% by weight. Thoroughly wet the one-gram dry sample in the surfactant solution and allowed to soak for 30 minutes. Transfer the filler completely into the sieve cup and apply water spray for 2 minutes. Surfactant solution may be added as needed and physical means used to disperse any clumped particles. Dry the sample and handle as described in ASTM C 430.

(C) Prequalification

Bituminous adhesives are required to be pre-qualified by the Department's Transportation-Traffic Engineering Branch. For more information on the pre-qualification process contact the Traffic Engineering Branch-Traffic Control Section.

(D) Packaging and Labeling

Pack the adhesive in self-releasing cardboard containers which will stack properly. Containers shall have a net weight of 50 to 60 pounds and contain 2 to 4 subcompartments. Have the label show the manufacturer, quantity, and batch number. Print *Bituminous Adhesive for Pavement Markers* or similar wording on the label.

(E) Certification

A certification from the manufacturer showing the physical properties of the bituminous adhesive and conformance with the Specifications will be required. Supply certification prior to use.

(F) Application

Apply the adhesive according to the manufacturer's requirements and the following requirements.

Apply the adhesive when the road surface, ambient air and pavement marker temperatures are in the range of 50°F to 160°F on dry pavement.

The composition of the adhesive shall be such that its properties will not deteriorate when heated to and applied at temperatures up to 425°F using either air or oil-jacketed melters.

Melt and heat the bituminous adhesive in either thermostatically controlled double boiler type units using heat transfer oil or thermostatically controlled electric heating pots. Do not use direct flame units.

Heat the adhesive to between 375°F and 425°F and applied directly to the pavement surface from the melter/applicator by either pumping or pouring. Maintain the

application temperature between 375°F and 425°F as lower temperatures may result in decreased adhesion while higher temperatures may damage the adhesive.

Use sufficient adhesive to insure total contact with the entire bottom of the pavement marker. Apply pavement markers to the adhesive immediately (within 5 seconds) to assure bonding. Place the pavement marker in position by applying downward pressure until the marker is firmly seated with the required adhesive thickness and squeeze-out. Remove excessive adhesive squeeze-out from the pavement and immediately remove adhesive on the exposed surfaces of pavement markers. Soft rags with mineral spirits conforming to Federal Specifications TT-T-291 or kerosene may be used if necessary, to remove adhesive from exposed faces of pavement markers. No other solvent may be used.

Do not waste or spill any excess adhesive on Department right-of-way. Remove and properly dispose of any adhesive spilled or dumped at such location. The Contractor at no cost to the Department will correct any damage incurred to the Department, highway or appurtenances as a result of misplaced adhesive.

The adhesive may be reheated and reused. However, the pot life at application temperatures shall not exceed the manufacturer's recommendations.

Clean out of equipment and tanks may be performed using petroleum solvents such as diesel fuel or similar materials. All solvents shall be removed from the equipment tanks and lines before the next use of the melter.

TABLE 1081-1
PROPERTIES OF EPOXY

TYPE PROPERTY	1 Min Max	2 Min Max	3 Min Max	3A Min Max	4A Min Max	4B Min Max	5 Min Max	6A Min Max	6B Min Max	6C Min Max
VISCOSITY-POISES @ 77°F ± 2°F ± (25°C ±1°C) SPINDLE NO. SPEED (RPM)	GEL	10 30 3 20	25 75 4 20	GEL	40 150 4 10	40 150 4 10	1 6 2 50	1500 3000 with helipath stand TD @ 5	400 800 6 10	1500 3000 with helipath stand @ 5
POT LIFE (MINUTES)	20 50	30 60	20 50	5 50	40 80	40 80	20 60	8 13	8 13	7 10
TENSILE STRENGTH PSI (MPa) AT 7 DAYS	1500	2000	4000	4000	1500	1500	4000			
TENSILE ELONGATION % AT 7 DAYS	30	30	2 5	2 5	5 15	5 15	2 5			
COMPRESSIVE STRENGTH: PSI (MPa) OF 2 in MORTAR CUBES @ 24 HRS. @ 7 DAYS	NEAT 3000 5000	4000	6000	NEAT 6000	3000	3000 5000	6000			
SHORE HARDNESS @ 24 HRS @ 7 DAYS	60 70	60 70	70 80	70 80	65 75	65 75	70 80			
WATER ABSORPTION % MAX.	1.5	1.0	1.0	1.5	1.0	1.0	1.0			
ASH CONTENT % MAX	30	2.0	2.0	50	10 30	10 30	2.0			
BOND STRENGTH SLANT SHEAR TEST: PSI (MPa) @ 14 DAYS	1500	1500	2000	2000	1500	1500	1500			

SECTION 1082
STRUCTURAL TIMBER AND LUMBER

1082-1 GENERAL

*A*ll timber and lumber shall be Southern Pine and be graded in accordance with the current grading rules of the Southern Pine Inspection Bureau unless otherwise specified or approved by the Engineer. Stress rated grades of Southern Pine other than those specified may be used provided the grades used have a stress rating equal to or higher than the grades specified, except that for temporary crossings, the use of stress rated lumber having stress ratings below those specified may be used subject to the approval of the Engineer.

Have all timber and lumber, including any preservative treatment, inspected and/or tested at no cost to the Department by an approved commercial inspection company before it is delivered to the project. Provide industry standard commercial inspection reports for each shipment of untreated timber or lumber prior to its use on the project. Provide industry standard commercial inspection reports and treatment test reports for each shipment of treated timber or lumber prior to its use on the project. Perform all timber and lumber treatment inspections in accordance with Standard M2 (Part A) of the AWPA Specifications. In addition, brand, hammer mark, ink stamp or tag each piece of timber or lumber with the approved commercial inspection company's unique mark to indicate it has been inspected.

1082-2 UNTREATED TIMBER AND LUMBER

Lumber that is 2" to 4" thick and 2" to 4" wide shall conform to the requirements for Structural Light Framing, Grade No. 1 Dense MC19. Lumber that is 2" to 4" thick and 6" wide and wider shall conform to the requirements for Structural Joists and Planks, Grade No. 1 Dense MC19. Lumber that is 5" and thicker along the least dimension shall conform to the requirements for Structural Lumber, Grade Dense Structural 72. Rough lumber will be acceptable except where surfacing is called for by the contract. Rough lumber may vary 1/4" plus or minus from the dimensions shown on the contract or bill of material.

1082-3 TREATED TIMBER AND LUMBER

(A) General

Grade marked lumber will not be required. Brand or ink stamp each piece of treated lumber in accordance with the American Wood Preservers Association Standard M6.

(B) Bridges, Fender Systems, and Piles

Lumber for bridges that is 2" to 4" thick and 2" to 4" wide shall conform to the requirements for Structural Light Framing, Grade No. 1 Dense. Lumber for bridges that is 2" to 4" thick and 6" wide and wider shall conform to the requirements for Structural Joists and Planks, Grade No. 1 Dense. Lumber for bridges that is 5" and thicker along the least dimension shall conform to the requirements for Structural Lumber, Grade Dense Structural 65. Lumber for fender systems shall conform to the requirements for Structural Lumber, Grade Dense Structural 65.

Timber for bearing piles shall meet the requirements of ASTM D25 except that the timber shall be Southern Pine, and have a minimum of a 2" sap ring or a 3" sap ring where called for by the contract or where the preservative is creosote and the retention is greater than 18 pounds per cubic foot.

Rough lumber will be acceptable except where surfacing is called for by the contract or bills of material. Rough lumber may vary 1/4" plus or minus from the dimensions shown on the plans or bill of material. Dressed lumber may be 1/8" scant from the dimensions shown on the plans or bill of material. A 1/4" tolerance in length will be permitted.

(C) Guardrail Posts

Lumber for guardrail posts shall conform to the requirements for Timbers, Grade No.1.

Rough lumber will be acceptable.

An allowable tolerance of 3/8" scant will be permitted from nominal dimensions.

(D) Fence Posts and Braces

Sawed fence posts and braces no larger than 4" by 4" shall conform to the requirements for Structural Light Framing, Grade No. 2. Sawed fence posts and braces larger than 4" by 4" shall conform to the requirements for Timbers, Grade No. 1.

Round lumber shall meet the requirements of Subarticle 1050-2(A).

Use fully dressed S4S lumber for fence posts.

An allowable tolerance of 1/2" scant will be permitted from nominal dimensions of sawed and dressed lumber.

(E) Sign Posts and Battens

Lumber for sign posts no larger than 4" by 4" shall conform to the requirements for Structural Light Framing, Grade No. 1 MC19. Lumber for sign posts larger than 4" by 4" and lumber for sign battens shall conform to the requirements for Timbers, Grade No. 1. Use fully dressed S4S lumber for sign posts and battens.

An allowable tolerance of 1/2" scant will be permitted from nominal dimensions of sign posts. A tolerance of 1" under and 3" over will be permitted in the length of the post.

(F) Poles

Timber for poles shall meet the requirements of ANSI O5.1 except the timber shall be treated Southern Pine or treated Douglas Fir. Use 40’ Class 3 poles unless otherwise specified in the contract.

1082-4 PRESERVATIVE TREATMENT

(A) General

Give all timber and lumber required to be treated a preservative treatment in accordance with Standard C1 of the American Wood-Preserver's Association. The required retetion of chromated copper arsenate is specified on the oxide basis. Preservative retention will be determined by the assay method.

After treatment, handle the timber and lumber carefully with rope slings, without sudden dropping, breaking of the fibers, bruising, or penetrating the surface with tools or hooks.

Treated timber and lumber will not be accepted for use unless it has been inspected and found satisfactory, both before and after treatment, and shall be delivered to the project site in a condition acceptable to the Engineer.

Use treating plants that have laboratory facilities at the plant site for use of the inspector in accordance with Standard C1 of the American Wood-Preserver's Association.

(B) Timber Preservatives

All timber preservatives shall conform to the requirements of Standard C1 of the American Wood-Preserver's Association.

(C) Bridges, Fender Systems, and Piles

Standard C2 of the American Wood-Preserver's Association will be applicable to the treatment of timber and lumber for bridges and fender systems, except that the type of preservative and the retention of preservative will be as required by the contract.

Standard C3 of the American Wood-Preserver's Association will be applicable to the treatment of piles, except that the type of preservative and the retention of preservative will be as required by the contract.

(D) Guardrail Posts

Standard C2 of the American Wood-Preserver's Association will be applicable to the treatment of guardrail posts, except that the required retention of preservative shall be as below.

Give all guardrail posts a preservative treatment of creosote, pentachlorophenol or chromated copper arsenate. The same type of preservative is to be used throughout the entire length of the project.

Minimum retention for creosoted timber will be 12 pounds of preservative per cubic foot of wood. Minimum retention for timber treated with pentachlorophenol will be 0.6 lb. of dry chemical per cubic foot of wood. Minimum retention for timber treated with chromated copper arsenate will be 0.6 lb. of dry chemical per cubic foot of wood.

(E) Fence Posts and Braces

Standard C2 of the American Wood-Preserver's Association will be applicable to the treatment of sawed posts and braces, except that the required retention of preservative will be as below.

Standard C5 of the American Wood-Preserver's Association will be applicable to the treatment of round posts and braces, except that the required retention of preservative will be as below.

Prior to treatment, peel round posts and braces cleanly for their full length, remove all bark and innerskin, and trim all knots and projections flush with the surface of the surrounding wood. Machine peeling will be permitted. Cut the ends to the proper length before treatment.

Give all fence posts and braces a preservative treatment of either creosote, pentachlorophenol, or chromated copper arsenate. The same type of preservative shall be used throughout the entire length of the project.

Minimum retention for creosoted sawed timber will be 10 pounds of preservative per cubic foot of wood. Minimum retention for sawed timber treated with pentachlorophenol will be 0.5 lb. of dry chemical per cubic foot of wood. Minimum retention for sawed timber treated with chromated copper arsenate will be 0.5 lb. of dry chemical per cubic foot of wood.

Minimum retention for creosoted round timber will be 8 pounds of preservative per cubic foot of wood. Minimum retention for round timber treated with pentachlorophenol will be 0.4 lb. of dry chemical per cubic foot of wood. Minimum retention for round timber treated with chromated copper arsenate will be 0.4 lb. of dry chemical per cubic foot of wood.

(F) Sign Posts and Battens

Standard C2 of the American Wood-Preserver's Association will be applicable to the treatment of sign posts and battens, except that the required retention of preservative will be as below.

Give all sign posts and battens a preservative treatment of either pentachlorophenol or chromated copper arsenate. The same type of preservative shall be used throughout the entire length of the project.

Minimum retention for timber treated with pentachlorophenol will be 0.6 lb. of dry chemical per cubic foot of wood. Minimum retention for timber treated with chromated copper arsenate will be 0.6 lb. of dry chemical per cubic foot of wood.

All timber shall have moisture content of not greater than 19 percent before treatment. Redry timber treated with chromated copper arsenate after treatment until it has moisture content of not greater than 25 percent.

(G) Poles

Standard C4 of the American Wood-Preserver's Association will be applicable to the treatment of poles, except that the required retention of preservative will be as below.

Give all poles a preservative treatment of either pentachlorophenol, or chromated copper arsenate. The same type of preservative shall be used throughout the entire length of the project.

Minimum retention for poles treated with pentachlorophenol will be 0.45 lb. by assay of dry chemical per cubic foot of wood. Minimum retention for poles treated with chromated copper arsenate will be 0.6 lb. by assay of dry chemical per cubic foot of wood.

SECTION 1084

PILES

1084-1 BEARING PILES

(A) Treated Timber Bearing Piles

Timber for treated timber bearing piles shall meet the requirements of Article 1082-3.

Give treated timber bearing piles a preservative treatment in accordance with Article 1082-4.

(B) Steel Bearing Piles

Prior to incorporating steel bearing piles into the work, obtain all applicable certified mill test reports clearly identifiable to the lot of material by heat numbers and submit these reports to the Engineer for review and analysis, and receive approval of such test reports from the Engineer. These requirements apply to both domestic and foreign produced steel bearing piles. Transfer the heat number of each painted pile to the newly painted surface with a permanent marker of a color contrasting to the paint once the paint has fully cured.

(1) Steel H Piles

Steel H piles shall meet the requirements of ASTM A572 Grade 50 or A588.

(2) Steel Pipe Piles

Steel pipe piles shall be of uniform diameter and conform to the requirements of ASTM A252 Grade 3 modified (50,000 psi). Make all joints and seams in the pipe pile watertight. Unless otherwise indicated by the contract, the ends of pipe pile may be flame cut. Square flame cut ends with axis of the pile so as to provide a full uniform bearing over the entire end area when the pile is being driven. Pipe piles under 24" in diameter shall be spliced by certified pipe welder.

(C) Prestressed Concrete Bearing Piles

Prestressed concrete bearing piles shall meet the requirements of Section 1078.

1084-2 SHEET PILES

(A) Treated Timber Sheet Piles

Timber for treated sheet piles shall meet the requirements of Article 1082-3.

Give timber for treated timber sheet piles a preservative treatment in accordance with Article 1082-4.

(B) Steel Sheet Piles

Steel sheet piles detailed for permanent applications shall meet the requirements of ASTM A690 unless otherwise required by the plans.

Steel sheet piles detailed for temporary applications shall meet the requirements of ASTM A328.

(C) Prestressed Concrete Sheet Piles

Prestressed concrete sheet piles shall meet the requirements of Section 1078.

SECTION 1086
PAVEMENT MARKERS

1086-1 TEMPORARY RAISED PAVEMENT MARKERS

(A) General

Use temporary raised pavement markers that have been evaluated by NTPEP.

Use temporary raised pavement markers of the prismatic reflector type, or better as approved. The markers shall be constructed either of an injection molded plastic body and base or consist of a plastic shell filled with a mixture of inert thermosetting compound and filler material. Either construction type shall contain one or more integrated prismatic reflective lenses to provide the required color designation.

The minimum reflective area of the lens face is 2.0 square inches.

The color of the reflective pavement marker housing shall match the pavement marking color, which it supplements.

All raised pavement marker reflective lenses shall be in close conformance with the Federal Standard No. 595 colors as listed below when viewed at night.

Crystal	Color No. 17886 (White)
Yellow	Color No. 13538
Red	Color No. 11302

(B) Adhesives

(1) Epoxy

The epoxy shall meet the requirements of Section 1081.

The two types of epoxy adhesive which may be used are Type 6A (Standard Setting), and Type 6C (Rapid Setting). Use Type 6A when the pavement temperature is above 60°F. Use Type 6C when the pavement temperature is between 50°F and 60°For when a very fast set is desirable. Epoxy adhesive Type 6C-Cold Set may be used to attach temporary pavement markers to the pavement surface when the pavement temperature is between 32°F and 50°F.

(2) Hot Bitumen

The Hot Bitumen shall meet the requirements of Article 1081-7.

(3) Pressure Sensitive

As supplied by the manufacturer.

(C) Material Certification

Furnish a Type 2 Certification in accordance with Article 106-3 for all raised pavement markers prior to use.

1086-2 PERMANENT RAISED PAVEMENT MARKERS

(A) General

Use raised pavement markers that have been evaluated by NTPEP. The markers shall be constructed either of an injection molded plastic body and base or consist of a plastic shell filled with a mixture of inert thermosetting compound and filler material. Either construction type shall contain one or more integrated prismatic reflective lenses to provide the required color designation. Raised pavement markers (permanent) shall be of the glass or plastic face lens type and meet the requirements of Subarticle 1086-1(A). Plastic lenses shall have an abrasion resistant coating.

(1) Potted Markers

Potted marker shells shall be made of molded methyl methacrylate conforming to Federal Specification L-P-380C, Type I, Class - 3. Filling material shall be an inert thermosetting compound selected for strength, resilience, and adhesion adequate to meet physical requirements of the Specifications. Sand or other inert granulars shall be embedded in the surface of the inert thermosetting compound and filler material prior to its curing to provide a surface, which will readily bond to the adhesive.

(2) Injection-molded Markers

Injection-molded markers shall consist of polymer materials selected for strength and resilience adequate to meet the physical requirements of the Specifications. The bottom surface of the marker shall contain grooves or nonsmooth structure designed to increase bonding with the adhesive.

(B) Optical Requirements

All optical performance for permanent raised pavement markers shall conform to ASTM 4280-04.

(C) Physical Properties

All physical properties for permanent raised pavement markers shall conform to ASTM 4280-04.

(D) Hot Bitumen Adhesives

Use Hot Bitumen adhesive for mounting the pavement markers to the pavement. The Hot Bitumen adhesive shall meet the requirements of Article 1081-7. Other adhesives such as epoxy or cold bituminous adhesive pads are will not be acceptable.

(E) Material Certification

Furnish a Type 2 Certification in accordance with Article 106-3 for all raised pavement markers prior to use.

1086-3 SNOWPLOWABLE PAVEMENT MARKERS

(A) General

(1) Use snowplowable pavement markers that have been evaluated by NTPEP. The snowplowable pavement marker shall consist of a cast iron housing with one or more glass or plastic face lens type reflective lenses to provide the required color designation. Shape the casting to deflect a snowplow blade upward in both directions without being damaged. Incorporate into the casting two parallel keels and a connecting web designed to fit into slots cut into the road surface. Plastic lens faces shall utilize an abrasion resistant coating.

(2) Use recycled snowplowable pavement whichmarkers that meet all the requirements of new snowplowable pavement markers except the requirement of Subarticle 1086-3(B)(1). Recycled snowplowable pavement markers with minimal variation in dimensions are acceptable only when the reflector fits in the casting of the recycled snowplowable pavement marker as originally designed.

(B) Castings

(1) Dimensions

The dimension and slope and minimum area of reflecting surface shall conform to dimensions as shown in the plans.

Minimum Area of Each Reflecting Surface = 1.44 in^2

(2) Materials

Nodular iron, meeting the requirements of ASTM A536.

(3) Surface

The surface of the keel and web shall be free of scale, dirt, rust, oil, grease or any other contaminant which might reduce its bond to the epoxy adhesive.

(4) Identification

Mark the casting with the manufacturer's name and model number of marker.

(C) Reflectors

(1) General

Laminate the reflector to an elastomeric pad and attach with adhesive to the casting.

Thickness of Elastomeric Pad = 0.04"

(2) Reflector Type

One-direction, one color (crystal)
Bidirectional, one color (yellow and yellow)
Bidirectional, two colors (red and crystal)
Bidirectional, two colors (red and yellow)

All pavement marker reflective lenses shall be in close conformance with the Federal Standard No. 595 colors as listed below when viewed during night situations.

Crystal:	Color No. 17886 (White)
Yellow:	Color No. 13538
Red:	Color No. 11302

(3) Reflector Optical Requirements

(a) Definitions

Horizontal entrance angle means the angle in the horizontal plane between the direction of incident light and the normal to the leading edge of the marker.

Observation angle means the angle, at the reflector, between observer's line of sight and the direction of the light incident on the reflector.

Specific intensity (S.I.) means candlepower of the returned light at the chosen observation and entrance angles for each foot candle of illumination at the reflector.

S.I. = RL x (D x D) IL
S.I. = Specific Intensity
RL = Reflected Light
IL = Incident Light
D = Test Distance

(b) Optical Performance

Test the reflector for specific intensity as described below:

Form a 1" diameter flat pad using #3 coarse steel wool per Federal Specification FF-W-1825. Place the steel wool pad on the reflector lens. Apply a load of 50 lbs. and rub the entire lens surface 100 times. (NOTE: Do not abrade the red lens of the Type 3 and Type 4 bi-directional units.)

Locate the reflector to be tested with the center of the reflecting face at a distance of 5 ft from a uniformly bright light source having an effective diameter of 0.2".

The photocell must be an angular ring 0.37" I.D. x 0.47" O.D. Shield it to eliminate stray light. The distance from light source center to the center of the photoactive area shall be 0.2". If a test distance of other than 5 ft is used, modify the source and receiver in the same proportion as the test distance.

After abrading the lens surface using the above steel wool abrasion procedure, the specific intensity of each crystal reflecting surface at 0.2 degrees observation angle must not be less than the following when the incident light is parallel to the base of the reflector.

MINIMUM SPECIFIC INTENSITY
(candle/footcandle/unit marker)

	Horizontal-Entrance-Angle	
Color	0 degrees	20 degrees
Crystal	3.00	1.20
Yellow	1.80	0.72
Red	0.75	0.30

(A) Optical Performance

All optical performance for snowplowable pavement markers shall conform to ASTM 4383-05.

(B) Physical Properties:

All physical properties for snowplowable pavement markers shall conform to ASTM 4383-05.

(C) Epoxy Adhesive

The epoxy adhesive shall meet the requirements of Section 1081.

Mix the Epoxy adhesive rapidly by a two component type automatic metering, mixing and extrusion apparatus.

(D) Material Certification:

Furnish a Type 2 Certification in accordance with Article 106-3 for all raised snowplowable markers prior to use.

SECTION 1087
PAVEMENT MARKINGS

1087-1 GENERAL

Yellow and white pavement markings shall be retroreflective. Black pavement markings shall be matte, non-retroreflective.

The material manufacturer has the option of formulating the pavement marking material according to his own specifications, however, the manufacturer shall meet all the minimum requirements specified herein.

All pavement marking materials, pigments, beads, and resins shall be free from all skins, dirt, and foreign objects.

Use pavement marking materials capable of being fabricated into pavement markings of specified dimensions and adhering to asphalt and portland cement concrete pavements when applied in accordance with their manufacturer's recommendation.

Pavement marking materials upon heating shall not exude fumes, which are toxic, or injurious to persons or property.

Homogeneously mix all pavement marking materials.

1087-2 COMPOSITION

(A) Paint Composition

Pavement marking paint shall be a ready mixed type paint product conforming to U.S. Federal Specification Number (FP96-Section 718.14) with spraying consistency suitable for use as a retroreflective pavement marking. Glass beads are dropped by suitable pressurized means into the wet paint as it is applied to the pavement.

(B) Removable Tape Composition

Removable tape pavement marking shall be composed of materials as specified by their manufacturer.

Use removable tape markings capable of conforming to pavement contours, breaks, faults, etc. through the action of traffic at normal pavement temperatures. The tape shall have resealing characteristics such that it is capable of fusing with itself and previously applied marking tape of the same composition under normal conditions of use. The removable tape markings shall be patchable.

Use removable tape markings capable of adhering to the pavement by means of a pressure-sensitive pre-coated adhesive or as directed by the manufacturer.

(C) Thermoplastic Composition

Use Thermoplastic Alkyd/Maleic pavement markings composed of the following materials:

COMPONENT	BY WEIGHT
Alkyd/Maleic Binder	18.0% Min
Glass Beads (Premixed)	30.0% Min
Titanium Dioxide Pigment (ASTM D476 Type 2)	10.0% Min.
Yellow Pigment (For Yellow Marking Only) Silica Encapsulated Lead Chromate Pigment	4.0% Min.

Use white thermoplastic that does not contain anatase titanium dioxide pigment.

Provide Yellow Thermoplastic that contains only heat resistant silica encapsulated lead chromate pigment. The lead chromate pigment shall contain a minimum of 60% lead chromate.

Calcium carbonate and inert fillers may be as opted by the manufacturer, providing all other qualifications are met.

The total silica content used in the formulation of the thermoplastic shall be the premixed glass beads. Uniformly disperse the pigment, beads, and filler in the binder.

The Alkyd/maleic binder shall consist of a mixture of synthetic resins (at least one synthetic resin shall be solid at room temperature) and a high boiling point plasticizers. At least one-half of the binder composition shall be 100% maleic-modified glycerol of resin and be no less than 15% by weight of the entire material formulation. The binder shall contain no petroleum hydrocarbon resins. Use resins/rosins that are maleic-modified glycerol esters.

The thermoplastic material shall be free of contaminates and be homogeneously dry-blended or hot mixed from 100% virgin stock using no reprocessed materials, (excluding the requirement to use reprocessed glass).

The thermoplastic material shall not deteriorate or discolor when held at the application temperatures for periods of time of up to 4 hours or upon repeated reheating (a minimum of 4 times).

The color, viscosity, and chemical properties versus temperature characteristics of the thermoplastic material shall remain constant for up to 4 hours at the application temperature and be the same from batch to batch.

The thermoplastic material shall be readily applicable at temperatures between 400°F & 440°F from the approved equipment to produce lines and symbols of the required

above the pavement thickness.

(D) Cold Applied Plastic Composition

Cold applied plastic pavement marking shall be composed of the following materials:

COMPONENT	BY WEIGHT
Resins and Plasticizers	20% Min.
Pigments	30% Min.
Graded Glass Beads	33% Min.

The cold applied plastic pavement marking shall consist of a mixture of high quality polymeric materials, pigments, and glass beads distributed throughout its base cross-sectional area, with a reflective layer of beads bonded to the top surface.

The cold applied plastic markings shall adhere to the pavement by means of a pressure-sensitive pre-coated adhesive.

The cold applied plastic shall conform to pavement contours, breaks, faults, etc. through the action of traffic at normal pavement temperatures. The film shall have resealing characteristics such that it is capable of fusing with itself and previously applied marking tape of the same composition under normal conditions of use. The cold applied plastic pavement marking shall be patchable.

1087-3 COLOR

All pavement markings, without drop-on beads, shall visually match the color chips that correspond to the Federal Standard Number 595b for the following colors:

WHITE: (Color 17886)
YELLOW: (Color 13538)
BLACK: (Color 37038)

1087-4 GLASS BEADS

(A) Composition

The silica content of the glass beads shall be at least 60 percent.

Manufacture the beads from 100% recycled non-pigmented glass from a composition designed to be highly resistant to traffic wear and to the effects of weathering. All standard intermix and drop on glass beads shall be manufactured using 100% North American recycled glass cullet.

This requirement will not apply for tape.

(B) Physical Characteristics

The glass beads shall be colorless, clean, transparent and free from milkiness, excessive air bubbles, skins and foreign objects. The glass beads shall have a minimum refractive index of 1.50 when tested by the liquid immersion method (see ASTM D-1214 Becke Line Method or equal) at 77°F ±9°F be spherical in shape, be essentially free of sharp angular particles, and particles showing surface scarring and scratching.

(C) Gradation & Roundness

Use glass beads in all pavement markings with a minimum of 80% true spheres when tested according to ASTM D-1155. All Drop-On Glass Beads shall test in accordance with ASTM D-1214. All Drop-On Glass Beads used on Polyurea, Thermoplastic, Paint, and Heated-In-Heated-In-Place thermoplastic shall meet the following gradation requirements:

U.S. Standard Sieve Size	MINIMUM	MAXIMUM
Passing #20	100%	--
Retained on #30	5%	10%
Retained on #50	40%	80%
Retained on #80	15%	40%
Passing #80	0%	5%
Retained on #200	0%	5%

All Glass Beads Premixed in Thermoplastic, Heated-In-Place Thermoplastic, Cold Applied Plastic and Removable Tape shall meet AASHTO M-247 type I.

(D) Chemical Resistance

Conduct the following chemical resistance test on all glass beads:

Place 3 to 5 gram portions of the same glass bead batch to be tested in three separate Pyrex-glass beakers or three porcelain dishes. Cover one sample with distilled water, cover the second sample with 3N solution of Sulfuric Acid, and cover the third sample with 50% solution of sodium sulfides. After one hour of immersion, examine the glass bead samples microscopically for evidence of darkening and/or frosting. All 3 samples shall show no evidence of darkening and/or frosting.

(E) Moisture Resistance

Conduct the following moisture resistance test on Drop-on glass beads:

Place a 2 lb. minimum sample of glass beads in a clean, washed cotton bag with a thread count of 50 warp, 50 woof. Immerse the bag containing the sample in a container of water for thirty seconds or until the water covers the spheres, whichever is longer. Remove the bag from water and force excess water from the sample by squeezing the bag. Suspend the bag and allow to drain for two hours at room temperature 70°F-72°F. Then mix the sample in the bag by shaking thoroughly. Transfer the sample slowly to a clean dry glass funnel having a stem of 4" in length with 1/4" inside diameter. The entire sample shall flow freely through the funnel without stoppage. When first introduced in the funnel, if the spheres clog, it is permissible to lightly tap the funnel to initiate the flow.

1087-5 PACKAGING FOR SHIPMENT

Deliver all pavement marking and glass bead materials to the project in suitable containers packaged by the manufacturer. Clearly and adequately mark each material container to indicate the material, color, date of manufacture, process, batch or lot number, manufacturer's name and location, temperature application range, shelf life, and include the material safety data sheets (MSDS).

Thermoplastic pavement marking materials shall be in block or granular form packaged in either suitable corrugated containers or thermal degradable plastic bags to which it will not adhere during shipment or storage.

Package glass beads in moisture resistant bags.

1087-6 STORAGE LIFE

All pavement marking materials shall meet the requirements of this Specification for a period of one year from the date of shipment from the manufacturer to the Contractor, or the project. Replace any pavement marking materials not meeting the requirements of these Specifications.

1087-7 TESTS TO BE PERFORMED

When Independent Test Laboratory tests are required, perform them on samples taken by an agency certified by the Department from the same process, batch, or lot number as the material shipped to the project. The test reports shall contain the lot number. Independent Test Laboratories shall be approved by the Department.

Perform the following tests on pavement marking materials unless prescribed otherwise by the Engineer:

(A) Thermoplastic Pavement Marking Material

(1) Composition

(a)	% Binder	ASTM D4797
(b)	% Titanium Dioxide Pigment	ASTM D3720 or D4764
(c)	% Lead Chromate Pigment	D4797

(d) % Glass Beads ASTM D4797

(Except ash a 100 gram sample rather than a 10 gram sample to allow for testing of gradation and percent of rounds. Provide the results of sieve analysis and % rounds)

(2) Flash Point: ASTM D92 COC

The thermoplastic shall have a flashpoint of no less than 500°F.

(3) Requirements:

The thermoplastic material after heating for 240±5 minutes at 425±3°F and cooled to 77±3°F shall meet the following:

(a) Color:

White: Daylight reflectance 2° Standard observer and CIE illuminant

Using XYZ scale D65/10° 80 percent minimum.

ASTM E1349

Yellowness Index - The white thermoplastic shall not exceed a yellowness index of 0.12.

Yellow: Daylight reflectance at 2° Standard observer and CIE illuminant

Using XYZ scale D65/10° 45 Percent minimum =Y.

ASTM E 1349

(b) Bond Strength: ASTM D4796 (200 PSI minimum)

(c) Cracking Resistance at Low Temperatures-After applying a 4", 125 mil draw-down to concrete blocks and cooling to 15±3°F, the material shall show no cracks at an observation distance of 12".

(d) Specific Gravity: ASTM D792 1.95-2.20

(e) Softening Point: ASTM D36 215±15°F

(f) Drying Time: AASHTO T250 When applied at a thickness of 125 mils, the material shall set to bear traffic in no more than 2 minutes when air and substrate temperature is 50°F±3°F (and no more than 10 minutes when the air and substrate temperature is 90°F±3°F when applied at temperature of 412.5±12.5°F.

(g) Alkyd Binder Determination: The thermoplastic material shall immediately dissolve in diacetone alcohol. Slow dissolution is evidence of the presence of hydrocarbon binder components.

(h) Indentation Resistance: ASTM D2240 The Shore Type A2 Durometer with a 4.41 lb. load applied shall be between 40 and 75 units after 15 seconds at 115°F.

1087-8 MATERIAL CERTIFICATION

Furnish the following pavement marking material certifications in accordance with Article 106-3:

Glass Beads (for paint) - Type 3 Material Certification

Glass Beads (for thermoplastic and Polyurea) - Type 3 Material Certification and Type 4 Material Certification

Paint: Type 3 Material Certification

Removable Tape: Type 3 Material Certification

Thermoplastic: Type 3 Material Certification and Type 4 Material Certification

Thermoplastic and Polyurea: Type 3 Material Certification and Type 4 Material Certification

Cold Applied Plastic: Type 2 Material Certification and Type 3 Material Certification

SECTION 1088
DELINEATORS

1088-1 REFLECTIVE UNIT REQUIREMENTS FOR DELINEATORS

(A) Definition

Refer to ASTM D-4956

Entrance Angle means the angle at the reflector between direction of light incident on it and direction of reflector axis.

Observation Angle means the angle at the reflector between observer's line of sight and direction of light incident on the reflector.

Specific Intensity means the candlepower returned at the chosen observation angle by a reflector for each footcandle of illumination at the reflector.

(B) Reflective Elements

(1) Prismatic Plastic Type

(a) General

The reflector shall consist of an acrylic plastic prismatic reflector hermetically sealed to an acrylic plastic back.

The reflector shall consist of a clear and transparent face, herein referred to as a lens, with an acrylic plastic back fused to the lens under heat pressure around the entire perimeter of the lens. Where a central mounting hole is required, permanently seal the unit against dust, water, and water vapor.

The lens shall consist of a smooth front surface free from projections or indentations, other than a central mounting hole and identification

markings. Mold the manufacturer's trademark legibly into the face of the lens.

(b) Specific Intensity

Refer to ASTM D-4956

The specific intensity of each prismatic plastic type reflector shall be equal to, or exceed, the following minimum values with measurements made with reflectors spinning. Failure to meet the specific intensity minimum will constitute failure of the lot.

Observation Angle(Degrees)	Entrance Angle (Degrees)	Specific Intensity (Candlepower per Footcandle)		
		Crystal	Yellow	Red
0.1°	0°	119	71	29
0.1°	15°	119	28	--
0.1°	20°	47	28	11
0.1°	35°	50	30	--

Optical Testing Procedure

Locate the prismatic plastic type reflector to be tested at a distance of 100 feet from a single light source having an effective diameter of 2" operate the light source at approximately normal efficiency. Measure the return light from the reflector by means of a photoelectric photometer having a minimum sensitivity of 1 x 10 foot candles per mm scale division. The photometer shall have a receiver aperture of 0.5" diameter, shielded to eliminate stray light. The distance from light source center to aperture center shall be 2.1" for 0.1 observation angle. During testing, spin the reflectors so as to average the orientation effect.

If a test distance other than 100 feet is used, modify the source and aperture dimensions, and the distance between source and aperture, in the same proportion as the test distance.

(c) Durability

Seal Test

Use the following test to determine if a reflector is adequately sealed against dust and water:

Submerge 50 samples in water at room temperature. Subject the submerged samples to a vacuum of 5" gauge for 5 minutes. Restore atmospheric pressure and leave the samples submerged for 5 minutes, then examine the samples for water intake. Evidence of any water is considered a failure. Failure of more than 2% of the number tested will be cause for rejection.

Heat Resistance Test:

Test three reflectors for 4 hours in a circulating air oven at 175°+5°F. Place the test specimens in a horizontal position on a grid or perforated shelf, permitting free air circulation. At the conclusion of the test, remove the samples from the oven and permit them to cool in air to room temperature. The samples, after exposure to heat, shall show no change in shape and general appearance when compared with unexposed control standards. Any failures will be cause for rejection.

(2) High Performance Sheeting Type

The reflective sheeting shall be Type III high intensity (encapsulated lens) retroreflective sheeting or Type IV high intensity (microprismatic) retroreflective sheeting which conforms to the requirements of Section 1093.

1088-2 GUARDRAIL AND BARRIER DELINEATORS

(A) Brackets and Casings for Delineators

Make brackets for guardrail and barrier delineators out of 12 gauge galvanized steel, 0.063" thick aluminum alloy, or .080" thick polycarbonate. Use molded plastic type guardrail and barrier delineators that consist of a plastic casing and a reflective element.

(B) Reflective Element Requirements

The reflective element shall meet the requirements of Article 1088-1. In addition, guardrail delineators and side mounted barrier delineators shall have a minimum reflective area of 7 square inches. Top mounted barrier delineators shall have a minimum reflective area of 28 square inches.

(C) Material Certification

Furnish a Type 2 Material Certification in accordance with Article 106-3 for all guardrail and barrier (permanent) delineators and a Type 7 for all guardrail and barrier delineators (temporary) prior to use.

(D) Approval

All materials are subject to the approval of the Engineer.

1088-3 GUARDRAIL END DELINEATION

(A) General

Use guardrail end delineation that is adhesive coated yellow reflective sheeting applied with a pressure sensitive adhesive backing.

(B) Reflective Sheeting Requirements

Use Type III high intensity (encapsulated lens) or Type IV high intensity (microprismatic) yellow retroreflective sheeting which conforms to the requirements of Section 1093 for all guardrail end delineation. In addition, guardrail end

delineation shall have a minimum reflective area of 2 square feet for curved end sections or cover the entire portion of square end sections. See *Roadway Standard Drawings*.

(C) Material Certification

Furnish a Type 2 Material Certification in accordance with Article 106-3 for all guardrail end delineation prior to use.

(D) Approval

All materials are subject to the approval of the Engineer.

1088-4 BLANK

1088-5 OBJECT MARKERS

(A) General

Use 7 ft. galvanized steel U-shaped channel posts as supports for delineators that are fabricated from steel conforming to the requirements of ASTM A36 or ASTM A409. Use 7 foot posts, which weigh a minimum of 1.12 lbs per linear foot after fabrication and application of protective finish. Punch or drill all posts with 3/8" diameter holes on the centerline, spaced on 1" centers, starting 1" from the top and extending a minimum of 24" down the posts. Make sure that the holes are clean and the posts are free of burrs. Hot dip galvanize the posts after fabrication for the full length and total area in accordance with ASTM A123.

(B) Reflectors

Use 3" diameter prismatic plastic reflectors on object markers that meet the requirements of Subarticle 1088-1(B)(1).

(C) Reflective Sheeting Requirements

Use reflective Type III high intensity or Type IV high intensity (microprismatic) retroreflective sheeting on object markers that meet the requirements of Article 1093.

(D) Panel Requirements

Use panels that meet the requirements of Article 1092-1.

(E) Fasteners

Use fasteners that meet the requirements of Article 1092-1.

(F) Material Certification

Furnish a Type 5 Certification for sheeting, a Type 2 Certification for delineators, and a Type 1 Certification for U-channel posts in accordance with Article 106-3 prior to use.

(G) Approval

All materials are subject to the approval of the Engineer.

1088-7 TUBULAR MARKERS

(A) General

Provide tubular markers that are made of ultraviolet stabilized plastic impact resistant material and have been evaluated by NTPEP. Provide orange, yellow, white, and gray tubular markers as shown in the plans.

Provide tubular markers that are flexible or have a flexible joint at the base, such that it will return to its original shape and position if struck by a 5,000 Lb. vehicle at a velocity of 55 MPH. When struck the tubular markers shall not permanently distort to a degree that would prevent reuse.

Use tubular markers that are circular in shape and have a minimum height of 36" with a broadened base. Use tubular markers that have a minimum height of 42" on roadways with posted speed limits greater than 50 MPH.

Design tubular markers that have white retroreflective collars or as shown in the contract.

Where retroreflective collars are required, provide Type III high intensity (encapsulated lens) retroreflective sheeting or better that meets the requirements of Section 1093. Use retroreflective sheeting with a minimum width of 4" applied 360 degrees around the tubular marker.

(B) Material Certification

Furnish a Type 3 Material Certification in accordance with Article 106-3 for all new tubular markers and retroreflective collars and a Type 7 material certification for all used tubular markers and retroreflective collars prior to use.

(C) Approval

All materials are subject to the approval of the Engineer.

1088-8 FLEXIBLE DELINEATOR

(A) General

Provide Flexible delineators that have been evaluated by NTPEP.

(B) Retroreflective Sheeting

Use retroreflective sheeting that is a minimum of 16 square inches in area, with a minimum width of 3". The reflective sheeting shall be Type III high intensity (encapsulated lens) retroreflective sheeting or better and shall conform to the requirements of Section 1093.

Use retroreflective sheeting which is yellow, red, or crystal, as shown in the plans. Attach the retroreflective sheeting on the front and back of the delineator post as required by the contract.

(C) Post

Design a delineator post that is flexible and made of recycled material. Provide a delineator post that is resistant to impact, ultraviolet light, ozone, hydrocarbons, and stiffening with age.

Provide a post that is not seriously affected by exhaust fumes, asphalt or road oils, dirt, vegetation, soil, deicing salts, or any other types of air contamination or materials likely to be encountered. Upon weathering, the post shall not exhibit serious discoloration, checking or cracking, peeling or blistering, swelling, shrinking or distortion, or any other detrimental effects. Weathering shall not cause appreciable strength or flexibility loss.

Design a post with a smooth surface that is free from irregularities or defects. The surface of the post shall not soil excessively. If soiling does occur, it shall be easily cleaned using detergent and water, or solvent.

Use posts that have a convex shaped cross-section. The cord distance for the cross-section shall be from 3.5" to 4.5" in length.

Design a post such that it can maintain straightness throughout its entire life. Straight is defined as no point along its length any more than 1" away from a perfectly straight edge placed longitudinally along any side of the post.

Provide a post in which both sides of the top of the post accepts, and holds securely, retroreflectorized sheeting.

Design posts that are gray in color.

(D) Base Support

Provide a base support that is hot rolled rail steel or new billet steel meeting the physical requirements of ASTM A499, the chemical requirements of ASTM A1 and the requirements of Article 1088-5.

Use a base support that is a uniform flanged U-channel post with a nominal weight of 3 lbs/ft before holes are punched. Use base support posts that are 18" in length and have sufficient number of 3/8" diameter holes on 1" centers to facilitate attachment of the flexible post.

(E) Anchoring

Design a delineator post for a permanent installation to resist overturning, twisting, and displacement from wind and impact forces.

(F) Temperature

Design flexible delineators that do not bend, warp, or distort and remain straight, when stored or installed at temperatures up to + 120°F. Design All components of the flexible delineator, post, and reflective sheeting to remain stable and remain fully functional within a temperature range of -20°F to + 120°F.

(G) Impact Resistance, Wind Resistance

Design Flexible delineators that meet the Impact and wind resistance of the current evaluation criteria of the National Transportation Product Evaluation Program.

(H) Product Identification

Provide flexible delineator post that are permanently identified, on the rear side, with the manufacturer's name and the month and year of fabrication in order to provide

a tracking method for ongoing outdoor evaluation, and specification quality control. The letters shall be a minimum of 1/4" in height and permanently affixed to the rear of the marker.

(I) Material Certification

Furnish a Type 2 and Type 3 Certification in accordance with Article 106-3 for all flexible delineators prior to use.

(J) Approval

All materials are subject to the approval of the Engineer.

SECTION 1089
TRAFFIC CONTROL

1089-1 WORK ZONE SIGNS

(A) General

Rigid sign retroreflective sheeting requirements for Types VII, VIII and IX prismatic fluorescent orange shall conform to Section 1093. Cover the entire sign face of the sign substrate with Department approved Type VII, VIII or IX prismatic fluorescent orange reflective sheeting. No bubbles or wrinkles will be permitted in the material.

Roll-up sign retroreflective requirements shall conform to section 1093.

(1) Work Zones Signs (Stationary)

Use Type VII, VIII or IX (prismatic) fluorescent orange retroreflective sheeting that meets the following reflective requirements in Section 1093 respectively. Use approved composite or aluminum for sign backing. Signs and sign supports shall meet NCHRP 350 requirements for Breakaway Devices.

(2) Work Zones Signs (Barricade Mounted)

Use approved composite or roll-up signs for barricade mounted sign substrates. Approved composite barricade mounted warning signs (black on orange) shall be Type VII, VIII or IX sheeting that meets the retroreflective requirements of Section 1093. Sign and barricade assembly shall meet or exceed the requirements of NCHRP 350 for Work Zone Category II Devices.

(3) Work Zones Signs (Portable)

Use approved composite or roll-up sign substrates on portable sign stands.

Composite - Use Type VII, VIII or IX (prismatic) fluorescent orange retroreflective sheeting that meets the following reflective requirements in Section 1093. Signs and sign supports shall meet NCHRP 350 requirements for Breakaway Devices.

Roll-up Signs - Use fluorescent orange retroreflective roll-up signs that meet the following reflective requirements of Section 1093.

Use roll up signs that have a minimum 3/16" x 1 1/4" horizontal rib and 38" x 1 1/4" vertical rib and has been crash test to meet NCHRP 350 requirements and Traffic Control qualified by the Work Zone Traffic Control Unit.

(B) Material Certification

Furnish a Type 3 Material Certification in accordance with Article 106-3 for all new reflective sheeting and a Type 7 Material Certification for all used reflective sheeting prior to use.

(C) Approval

All materials are subject to the approval of the Engineer.

(D) Warranty

Warranty requirements for rigid sign retroreflective sheeting Types VII, VIII and IX are described in Section 1093-9 (F).

Roll-up fluorescent orange retroreflective signs will maintain 80% of its retroflectivity as described in Section 1093 for years 1 – 2 and 50% for year 3.

Rigid and Rollup Fluorescent orange signs will maintain a Fluorescence Luminance Factor (Y_F)* of 13% for 3 years.

*Fluorescence Testing Method is described in ASTM E2301 Test Methods for Fluorescent Retro reflective Sheeting.

Rigid and Roll up fluorescent orange signs shall maintain a total Luminance Factor (Y) of 25 for 3 years and conform to the requirements of section 1093 when measured in accordance with ASTM D4956.

1089-2 WORK ZONE SIGNS SUPPORTS

(A) General

Type of Supports

(1) Work Zone Signs (Stationary)

Provide Work Zone Sign Supports for Work Zone Signs (Stationary) that are sturdy, durable and crashworthy. Work Zone Signs (Stationary) and their supports shall meet appropriate NCHRP 350 crash criteria for category II work zone devices.

Use 3-Lb Steel U-Channel Post or 4"x 4" wood post for all Work Zone Signs greater than 16 square feet. Three lb. Steel U-Channel posts shall meet the requirements in Section 1049-1(B), may be galvanized steel, or may be painted green by the post manufacturer. Square steel tubing posts having equivalent strength of the 3-Lb. Steel U-Channel Post are also acceptable for use.

(2) Work Zone Signs (Portable)

Use Work Zone Signs and Portable Work Zone Sign Stands that are sturdy, durable and crashworthy.

(B) Material Certification

Provide portable work zone signs and stands that are listed on the Department's approved product list or accepted as traffic qualified by the Traffic Control Section. For more information on the Traffic-Qualification process, contact the Traffic Control Section.

Furnish a Type 3 Material Certification in accordance with Article 106-3 for all new Work Zone Sign (Stationary) posts and a Type 7 Material Certification for all used Work Zone Sign (Stationary) posts prior to use.

Furnish a Type 3 Material Certification in accordance with Article 106-3 for all new portable Work Zone Sign Stand Assemblies and a Type 7 Material Certification for all used portable Work Zone Sign Stand Assemblies prior to use.

(C) Approval

All materials are subject to the approval of the Engineer.

1089-3 BARRICADES

(A) General

Construct barricades out of perforated square steel tubing, angle iron or other Department approved materials that meet or exceed the requirements of NCHRP 350 crash criteria for category II work zone devices..

Use barricade rails constructed of approved composite, hollow/corrugated extruded rigid polyolefin, high density polyethylene or other Department approved material that have a smooth face and alternating orange and white retroreflective stripes that slope at an angle of 45 degrees. Barricade rails shall meet or exceed the requirements of NCHRP 350 crash criteria for category II work zone devices.

(B) Supports

Support barricade rails in a manner that will allow them to be seen by the motorist and provide a stable support not easily blown over by the wind or traffic.

(C) Reflective Sheeting

Use Type VII, VIII or IX retroreflective sheeting that meets the requirements of Section 1093. Flame treat rails prior to applying the sheeting if required by the sign sheeting manufacturer. Apply the reflective sheeting with a pressure sensitive adhesive to both sides of the rails.

Use the same color sheeting on each rail of any individual barricade.

(D) Material Certification

Furnish a Type 3 Material Certification in accordance with Article 106-3 for all new barricades and a Type 7 Material Certification for all used barricades prior to use.

(E) Approval

All materials are subject to the approval of the Engineer.

1089-4 CONES

(A) General

Use cones made of ultraviolet stabilized plastic impact resistant material meeting the requirements of the MUTCD and this article. Orange will be the predominant color on cones.

Use cones conical in shape, with a minimum height of 28" or 36" and a minimum base dimension of 14 1/2" as shown in the plans. The 28" and 36" cones (excluding ballast) shall have a minimum weight of 7 pounds and 10 pounds respectively. When in an upright position, have the cones display the same dimensions regardless of their orientation to oncoming traffic.

(B) Ballast

Provide wind resistant cones that do not blow over under normal roadway conditions, including high speed truck traffic in close proximity to the cones when properly ballasted. Provide cones that do not permanently distort to a degree that would prevent reuse when struck.

Achieve ballasting of the cones by using any of the following methods:

(1) Cones with bases that may be filled with ballast,

(2) Doubling the cones or using heavier weighted cones,

(3) Cones with special weighted bases, or weights such as sandbag rings that can be dropped over the cones and onto the base to provide increased stability.

Seventy percent of the weight of the cone shall be in the base. These added weights shall not present a hazard if the devices are inadvertently struck.

(C) Retroreflective Collars

Where retroreflective collars are required, provide Type VI flexible vinyl high intensity (encapsulated lens) retroreflective sheeting or better for these collars which meets the requirements of Section 1093. Use 2 retroreflective collars, the top one is 6" wide and the bottom one is 4" wide; see *Roadway Standard Drawings*.

(D) Material Certification

Furnish a Type 3 Material Certification in accordance with Article 106-3 for all new cones and cone collars and a Type 7 Material Certification for all used cones and retroreflective collars prior to use.

(E) Approval

All materials are subject to the approval of the Engineer.

1089-5 CHANNELIZING DEVICES

(A) Drums

(1) General

Provide drums composed of a body, reflective stripes, and ballast that have been evaluated by NTPEP.

(2) Body

Provide a drum made of orange, impact resistant, ultraviolet plastic material capable of maintaining its integrity upon impact throughout a temperature range of -20°F to 125°F. When struck, the drum shall not permanently distort to a degree that would prevent reuse, nor roll excessively after impact. Design the drum to prevent water from accumulating and freezing in the top or bottom.

Provide a drum that is cylindrical in shape with the following dimensions; a minimum height of 36", a minimum top outer diameter of 18 " a bottom outer diameter of 21 to 24", and a weight of 12 to 15 pounds. The top outer diameter shall not exceed the bottom outside diameter. Provide closed tops on drums to prevent accumulation of debris.

(3) Retroreflective Stripes

Provide a minimum of three orange and two white alternating horizontal circumferential stripes. Use a 6 to 8" wide band of Type I Engineer Grade (enclosed lens) retroreflective sheeting or better that meets the requirements of Section 1093 for each band. Do not exceed 2" for any non-reflective spaces between orange and white stripes. Do not place stripes over any protruding corrugation areas. No damage to the reflective sheeting should result from stacking and unstacking the drums, or vehicle impact.

(4) Ballast

Ballast drums using the sandbag ballast method, the tire sidewall ballast method, or by the preformed weighted base ballast method. When properly ballasted, the drums shall be wind resistant to the extent of withstanding wind created by traffic under normal roadway conditions, including high speed truck traffic in close proximity to the drums. Do not place ballast on top of the drum.

(a) Sandbag Ballast Method

Supply a sandbag with 50 pounds of sand with each drum. Place the sandbag inside the body on top of the detachable base. Upon impact the main body of the drum shall deform and become detached from the base, allowing vehicles to easily pass over the remaining base

(b) Tire Sidewall Ballast Method

Design the base of the drums to accommodate a maximum of two tire sidewalls that when combined will have a minimum weight of thirty pounds and a maximum weight of fifty pounds. Use the manufacturer's required tire sidewall ballast. Upon impact the main body of the drum shall deform and become detached from the tire sidewalls, allowing vehicles to easily pass over the tire sidewall ballasts.

(c) Preformed Weighted Base Ballast Method

Supply a preformed base specifically designed for the model drum. The weight of each drum's preformed base will be self-certified by the manufacturers. Each drum with preformed bases shall be approved by the Work Zone Traffic Control Unit. Upon impact, the main body of the drum shall deform and become detached from the base allowing vehicles to easily pass over the remaining base.

(5) Material Certification

Furnish a Type 3 Certification in accordance with Article 106-3 for all new drums and a Type 7 Material Certification for all used drums prior to use.

(6) Approval

All materials are subject to the approval of the Engineer.

(B) Skinny-Drums

(1) General

Provide skinny-drums composed of a body, reflective stripes, and ballast and have been evaluated by NTPEP.

(2) Body

Provide a skinny-drum made of orange, impact resistant, ultraviolet plastic material capable of maintaining its integrity upon impact throughout a temperature range of -20°F to 125°F. When struck, the skinny-drum shall not permanently distort to a degree that would prevent reuse, nor roll excessively after impact. Design the skinny-drum to prevent water from accumulating and freezing in the top or bottom.

Provide a skinny-drum that is cylindrical in shape with the following dimensions; a minimum height of 42", a minimum top outer diameter of 4" and a bottom outer diameter of 7.5". The top outer diameter shall not exceed the bottom outside diameter. Provide closed tops on drums to prevent accumulation of debris.

(3) Retroreflective Stripes

Provide a minimum of two orange and two white alternating circumferential stripes for each skinny-drum. Use a minimum 6" or better that meets the

requirements of Section 1093 for each band. Do not exceed 2" for any non-reflective spaces between orange and white stripes. Do not place stripes over any protruding corrugation areas. No damage to the reflective sheeting should result from stacking and unstacking the skinny-drums, or vehicle impact.

(4) Ballast

Ballast skinny-drums using a preformed base specifically designed for the model skinny-drum. Each base shall be a minimum of 15 pounds and circular or polygonal with equal sides. When properly ballasted, the skinny-drums shall be wind resistant to the extent of withstanding wind created by traffic under normal roadway conditions including high speed truck traffic in close proximity to the skinny-drums. Do not place ballast on top of the drum. Upon impact, the main body of the drum shall deform and become detached from the base allowing vehicles to easily pass over the remaining base.

(5) Material Certification

Furnish a Type 3 Certification in accordance with Article 106-3 for all new skinny-drums and a Type 7 Material Certification for all used skinny-drums prior to use.

(6) Approval

All materials are subject to the approval of the Engineer.

1089-6 FLASHING ARROW PANELS

(A) General

Provide a trailer mounted flashing arrow panel that meets or exceeds the physical and operational requirements of the MUTCD and which has been evaluated by NTPEP. The following specifications supplement those basic requirements. Provide a totally mobile complete unit capable of being located as traffic conditions demand.

Display Panel

The display housing shall meet the minimum size requirements of a Type C panel with a 15 or 25 lamp configuration.

The display housing shall have a hand-crank mechanism to allow raising and lowering the display with a locking device to ensure the display housing will remain secured in either position

The display housing will have a minimum height of 7 feet from the bottom of the sign to the ground when raised in the upright position.

The display housing assembly shall be of weather resistant construction.

The lamps shall be controlled to provide the following modes as a minimum;

Flashing Right or Left Arrow, Flashing Double Arrow, Caution Mode (4 outermost corner lamps).

(B) Power System

Provide a unit that is solar powered and supplemented with a battery backup system that includes a 110/120 VAC powered on-board charging system.

The unit shall also be capable of being powered by standard 110/120 VAC power source.

The batteries, when fully charged, shall be capable of powering the display for 20 continuous days with no solar power.

Store the battery bank and charging system in a lockable, weather and vandal resistant box.

(C) Controller

Provide an automatic brightness/dimming of the display and a manual override dimming switch.

The controller shall provide a battery-charge status indicator.

Mobile radio or any other radio transmissions shall not affect the controller.

Store the controller in a lockable, weather and vandal resistant box.

(D) Trailer

Finish all exterior metal surfaces with Federal orange enamel per Federal Standard 595a, color chip ID# 13538 or 12473 respectively. The trailer shall be able to support a 100 MPH wind load with the display fully extended.

The trailer shall be equipped with leveling jacks capable of stabilizing the unit in a horizontal position when located on slopes 6:1 or flatter.

The trailer shall be properly equipped in compliance with North Carolina Law governing motor vehicles.

Provide a minimum 4" wide strip of fluorescent orange retroreflective sheeting to the frame of the trailer. Apply the sheeting to all sides of the trailer. The sheeting shall meet the requirements of Section 1088-1. Drums may be supplemented around the unit in place of the sheeting.

(E) Reliability

Provide a sign unit that all components are rated to operate at temperatures ranging from -30°F to 165°F.

The sign manufacturer shall notify the Work zone Traffic Control Unit whenever modifications are made to their sign that was prequalified on the Approved Products List. The Work Zone Traffic Control Unit will review changes and per its discretion either make no change to the sign's status or remove the sign from the list until the sign can be reevaluated.

(F) Material Certification

Furnish a Type 3 Certification in accordance with Article 106-3 for all new changeable message signs, a Type 7 Material Certification for all used changeable message signs, and wind load certifications required in Section 1089-6(C) for all new and used changeable message signs prior to use.

(G) Approval

The sign shall be on the Work Zone Traffic Control Approved Products List before use on construction projects in North Carolina. A sign may be removed from the Approved Products List due to unsatisfactory field performance and shall not return to the list until the manufacturer identifies the reason for the failure and the problem has been corrected to the satisfaction of the Department.

The sign manufacturer shall notify the Department whenever modifications are made to their sign that was prequalified on the Approved Products List. The Department will review changes and per its discretion, either make no change to the sign's status on the Approved Products List or remove the sign from the list until the sign can be reevaluated.

1089-7 CHANGEABLE MESSAGE SIGNS

(A) General

Provide trailer mounted changeable message signs that meet or exceed the requirements of the MUTCD and have been evaluated by NTPEP.

Provide a totally mobile complete sign unit capable of being located as traffic conditions demand.

(B) Display Panel

Provide 3 lines of a programmable message with a minimum of eight characters per line and a character height at a minimum of 18".

The display characters will be composed of LED elements. The display panel may be of the following types- Full Matrix, Continuous Line Matrix, and Character Matrix.

Messages are to be automatically centered and proportionally spaced on each line of a Full Matrix and Continuous Line Matrix displays. Character Matrix displays shall display odd number character messages one character left of the centerline.

The display characters shall be protected with a polycarbonate lens that shall not decrease the daytime visibility of the sign.

The display panel shall have an electro-hydraulic system to allow raising and lowering the display with 360 degree rotation capability. A locking device(s) shall be provided to ensure the display will remain secure in the raised, lowered and rotated positions. The sign shall have the capability to be raised and rotated to its operating position by one person.

A manual backup mechanism for the raising and lowering the display panel shall be provided in the event the electro-hydraulic system fails.

The display panel assembly shall be of weather resistant construction

(C) Power System:

The unit shall be Solar powered and supplemented with a battery backup system which includes a 110/120 VAC powered on-board charging system.

The batteries, when fully charged, shall be capable of powering the display for 20 continuous days with no solar power. The unit shall be capable of being powered by standard 110/120 VAC power source.

Store the battery bank and charging system in a lockable, weather and vandal resistant box.

(D) Controller

The controller shall provide at a minimum; a keyboard, a display for message review and editing, a light source for nighttime operations, an event time clock and all other required controls for the operation of the display. Access to controller operations shall have the capability to be password protected.

The controller shall include the following capabilities; manually dimming the display, storing a minimum of 99 user generated messages, adjusting the flash rate of display and display phasing and monitoring battery-charge status.

Mobile radio or any other radio transmissions shall not affect the controller.

The controller shall be stored in a lockable, weather and vandal resistant box.

The controller shall be pre-programmed with messages shown below and stored in memory:

MAX SAFE SPEED 25 MPH	MAX SAFE SPEED 30 MPH
STOP AHEAD	YIELD AHEAD
MAX SAFE SPEED 35 MPH	MAX SAFE SPEED 40 MPH
MAX SAFE SPEED 45 MPH	MAX SAFE SPEED 50 MPH
ONE LANE BRIDGE	SURVEY CREW
MAX SAFE SPEED 55 MPH	DETOUR AHEAD
CAUTION DETOUR AHEAD	LANE CLOSED AHEAD
RIGHT LANE CLOSED	LEFT LANE CLOSED
CENTER LANE CLOSED	SINGLE LANE AHEAD
MERGE LEFT	MERGE RIGHT
KEEP LEFT	KEEP RIGHT
PASS LEFT	PASS RIGHT
USE LEFT LANE	USE RIGHT LANE
MERGE AHEAD	ROAD MACHINES AHEAD
ROAD WORK AHEAD	FLAGGER AHEAD
BUMP	DIP
STOP AHEAD	YIELD AHEAD
BE PREPARED TO STOP	SIGNAL AHEAD

SIGNAL NOT WORKING	DO NOT PASS
ONE LANE BRIDGE	SURVEY CREW
SHOULDER WORK	SOFT SHOULDER
PAVEMENT ENDS	LANE ENDS
ROAD CLOSED 1/4 MILE	ROAD CLOSED 1/2 MILE
ALL TRAFFIC EXIT LEFT	ALL TRAFFIC EXIT RIGHT
ROAD NARROWS	ROAD CLOSED AHEAD
RAMP CLOSED	REDUCE SPEED
ROAD PAVING AHEAD	ALL TRAFFIC MUST STOP
SLOW MOVING TRAFFIC	NIGHT WORK AHEAD
CAUTION FLAGGER AHEAD	RUNAWAY TRUCK RAMP
MEDIAN WORK AHEAD	
LEFT LANE NARROWS	RIGHT LANE NARROWS
* TEST PATTERN A	**TEST PATTERN B

* Test Pattern A is 1/2 of the LEDs/flip-discs/or combination on at a time

- ** Test Pattern B is for the remaining 1/2 of the LEDs/flip-discs/or combination on at a time.

(E) Trailer:

Finish all exterior metal surfaces with Federal orange enamel per Federal Standard 595a; color chip ID# 13538 or 12473 respectively except for the sign face assembly that shall be flat black.

Provide a minimum 4" wide strip of fluorescent orange retroreflective sheeting to the frame of the trailer. Apply the sheeting to all sides of the trailer. The sheeting shall meet the requirements of Section 1088-1. Drums may be supplemented around the unit in place of the sheeting.

The trailer shall be able to support a 100 MPH wind load with the display fully extended.

The trailer shall be equipped with leveling jacks capable of stabilizing the unit in a horizontal position when located on slopes 6:1 or flatter.

The trailer shall be properly equipped in compliance with North Carolina Law governing motor vehicles.

(F) Reliability

Provide a sign unit that all components are rated to operate at temperatures ranging from -30°F to 165°F.

(G) Material Certification

Furnish a Type 3 Certification in accordance with Article 106-3 for all new changeable message signs, a Type 7 Material Certification for all used changeable message signs, and wind load certifications required in Section 1089-6(C) for all new and used changeable message signs prior to use.

(H) Approval

The sign shall be on the Work Zone Traffic Control Approved Products List before use on construction projects in North Carolina. A sign may be removed from the Approved Products List due to unsatisfactory field performance and shall not return to the list until the manufacturer identifies the reason for the failure and the problem has been corrected to the satisfaction of the NCDOT.

The sign manufacturer shall notify NCDOT whenever modifications are made to their sign that was prequalified on the Approved Products List. The Department will review changes and per its discretion either make no change to the sign's status on the Approved Products List or removed the sign from the list until the sign can be reevaluated.

1089-8 TEMPORARY CRASH CUSHIONS.

(A) General

Provide temporary crash cushions that meet or exceed the requirements of NCHRP 350 for work zone Test Level 2 for work zones that have a posted speed limit of 45 mph or less. Provide temporary crash cushions that meet or exceed the requirements of or NCHRP 350 for work zone Test Level 3 devices for work zones that have a posted speed limit of 50 mph or greater. Provide temporary crash cushions that shall remain intact after a side impact, and without maintenance, be capable of sustaining additional side or head-on impacts.

Contain the temporary crash cushion debris resulting from impact within the structure of the temporary crash cushion.

Include in the temporary crash cushion package any required rear transition panels to connect the back of the temporary crash cushion to rigid or flexible barrier systems as well as any required portable base as recommended by the manufacturer of the temporary crash cushion, to connect the bottom of the temporary crash cushion to an unpaved surface.

(B) Retroreflective End Treatments

Provide a yellow nose wrap that visually matches the color chip that corresponds to the Federal Standard No. 595a for Yellow (Color No. 13538) for all temporary crash cushions.

The reflective end treatment shall meet the requirement for reflectivity in Article 1088-1 and Roadway Standard Drawings.

(C) Material Certification

Furnish a Type 3 Certification in accordance with Article 106-3 for all new temporary crash cushions and a Type 7 Material Certification for all used temporary crash cushions prior to use.

(D) Approval

Use temporary crash cushions that are on the Work Zone Traffic Control Approved Products List.

1089-9 TRUCK MOUNTED IMPACT ATTENUATORS

(A) General

Provide Truck Mounted Impact Attenuators that meet or exceed the requirements of NCHRP 350 Test Level II for work zones that have a posted speed limit of 45 mph or less. Provide Truck Mounted Impact Attenuators that meet or exceed the requirements of NCHRP 350 Test Level III for work zones that have a posted speed limit of 50 mph or greater.

Use trucks with gross vehicle tare weight as described in the NCHRP 350 crash test for the impact attenuator provided. Provide two axle flat bed type trucks with minimum gross vehicle tare weight of 5,000 pounds that may be ballasted with sections of portable concrete barrier attached to the bed of the truck with bolts or straps, or concrete poured into the bed of the truck and attached to the truck with bolts, or a continuous layer of asphalt placed in the bed of the truck and attached to the truck with bolts.

Mount the impact attenuator on a truck chassis to provide a uniform clearance, as required by the Truck Mounted Impact Attenuator's manufacturer, between the bottom of the shell and the roadway. Use a steel backup support assembly of sufficient size and strength to permit mounting on the chassis by means of brackets, as required by Truck Mounted Impact Attenuator's manufacturer.

Provide Truck Mounted Impact Attenuators equipped with cartridges that have a standard trailer lighting system, including brake lights, tail lights, and turn signals.

(B) Retroreflective End Treatment

The reflective end treatment shall meet the requirements of Article 1088-1 and Roadway Standard Drawings.

(C) Material Certification

Furnish a Type 3 Certification in accordance with Article 106-3 for all new truck mounted impact attenuators and a Type 7 Material Certification for all used truck mounted impact attenuators prior to use.

(D) Approval

Use only truck mounted impact attenuators that are on the Work Zone Traffic Control Approved Products List.

1089-12 FLAGGER

(A) Stop and Slow Paddle

(1) Reflective Sheeting

Use reflective sheeting with a smooth, sealed outer surface that will display the same color both day and night. Cover the entire sign face with Type VII, VIII or IX reflective sheeting. Reflective sheeting shall meet the requirements of Section 1093. The distance from the bottom of the sign to the ground shall be a minimum of 7 feet.

(2) Material Certification

Furnish a Type 3 Certification in accordance with Sections 106-3 for all new reflective sheeting used on flagger paddles and a Type 7 Material Certification for all used sheeting prior to use.

(3) Approval

All materials are subject to the approval of the Engineer.

(B) Vest

(1) Reflective Sheeting

Use reflective sheeting with sealed outer surface that will display the same color both day and night. Design the reflective sheeting similar to Department chevron vests. Reflective sheeting shall meet the requirements of Section 1093.

(2) Material Certification

Furnish a Type 3 Certification in accordance with Sections 106-3 for all new reflective sheeting and a Type 7 Material Certification for all used sheeting on flagger vests prior to use.

(3) Approval

All materials are subject to the approval of the Engineer.

SECTION 1090
PORTABLE CONCRETE BARRIER

1090-1 PORTABLE CONCRETE BARRIER

(A) General

Use portable concrete barrier that meets all requirements of Section 854, Section 1077 and the plans.

(B) Used Portable Concrete Barrier

Used barrier will be acceptable provided the following conditions have been met:

(1) The Contractor has furnished a Type 7 material certification.

(2) The strength of the concrete in each barrier unit is at least 4500 psi as evidenced by nondestructive tests made in place by a rebound hammer in accordance with ASTM C805.

(C) Anchor Bolts

Use anchor bolts that meet the requirements of ASTM A325.

(D) Anchor Bolt Adhesives

Prior to application, test the adhesive for a tensile strength of 125% of the specified required yield load (42 kips) of the anchor bolt. Furnish certification that, for the particular bolt grade, diameter, and embedment depth required, the anchor system

will not fail by adhesive failure and that there is no movement of the anchor bolt. For certification and anchorage, use 3000 psi as the minimum portland cement concrete compressive strength used in this test.

Use adhesives that meet the requirements of Section 1081.

List the properties of the adhesive on the container and include density, minimum and maximum temperature application, setting time, shelf life, pot life, shear strength and compressive strength.

Package components of the adhesive in containers of such size that one whole container of each component is used in mixing one batch of adhesive. Design the containers to allow for all of the contents to be readily removed and be well sealed to prevent leakage. Furnish adhesive material that requires hand mixing in two separate containers marked as Component "A" and Component "B". A self contained cartridge or capsule consists of two components that will automatically be mixed as they are dispensed.

Clearly label each container with the manufacturer's name, date of manufacture, batch number, batch expiration date, all directions for use, and such warning of precautions concerning the contents as required by Federal or State Laws and Regulations.

(E) Approval

All materials are subject to the approval of the Engineer.

SECTION 1092

SIGNING MATERIALS

1092-1 SIGNS AND HARDWARE

Fabricate signs from aluminum alloy sheets. Use supporting frames and accessories made of aluminum. Use galvanized steel backing plates and mounting bolts. Use materials that conform to the requirements of Tables 1092-1 and 1092-2.

Filler metal shall conform to the requirements of Section 10(3) of the *Standard Specifications for Structural Supports for Highway Signs, Luminaires and Traffic Signals*.

Aluminum sign studs, welded to the sign panels in accordance with Article 901-3, shall be capable of withstanding a direct pull-out load of 400 pounds. Furnish a Type 3 Manufacturer's Certification demonstrating conformance to this requirement. The Materials and Tests Unit will take samples of the studs, and make random field tests of the welded studs to verify the statement of certification. Failure of more than 10 percent of the studs tested on any one sign will be considered sufficient evidence for rejection of stud welding on the entire sign. When tested in tension, the studs shall not fail in the weld area, but fail in the threaded portion of the stud.

TABLE 1092-1
ALUMINUM SIGN MATERIALS

Aluminum Materials	Alloy	ASTM Spec.
Extruded Bars	6061-T6	B221
Sheets and Plates	6061-T6,5052-H38, or 3004-H38	B209
Structural Shapes	6061-T6	B308
Standard Weight Pipe	6061-T6	B241
Castings	356-T7	B26
Bolts	6061-T6	B211
Nuts (1/4" Tap and under)	6061-T6	B211
Nuts (5/16" Tap and over)	6061-T6 or 6262-T9	B211
Washers (std. flat) Alclad	6061-T6	B209
Washers (std. lock)	7075-T6	B211
Welded Studs (1/4")	5356-H12 or 5356-H32	B211

TABLE 1092-2
STEEL SIGN MATERIALS

Galvanized Steel Materials	ASTM Spec. for Base Metal	ASTM Spec. for Galvanizing
Structural Shapes and Plates	A36	A123
Standard Weight Black Pipe	A53	A123
Bolts and Nuts	A307	A153
Washers (std. flat and lock)	A307	A153
High Strength Bolts, Nuts & Washers	A325	A153

Drill bolt holes and slots to finished size or they may be punched to finished size, provided the diameter of the punched holes is at least twice the thickness of the metal being punched. Flame cutting of bolt holes and slots will not be permitted. No galvanizing of any steel part will be allowed until all welding, cutting, milling, punching, and drilling of the part has been completed.

1092-2 RETROREFLECTIVE SHEETING

General Requirements

Reflectorize all signs as described in Section 1093. Use colors and sheeting types of the sign backgrounds and messages as shown in the contract. After preparation of the sign panels, in accordance with the requirements of Subarticle 901-3(D), apply retroreflective sheeting as required herein.

1092-3 CERTIFICATION

Provide a Type 6 Supplier's certification for all retroreflective sheeting used in the manufacture of the signs certifying that the sheeting meets all the requirements of Section 1092.

1092-4 VERY HIGH BOND TAPE

Provide a Type 6 Supplier's certification for all very high bond acrylic foam tape used in the manufacture of the signs certifying that the tape meets all the requirements of this section. The very high bond tape shall be Acrylic Foam Tape with a nominal thickness of 0.045" and a tensile adhesion of at least 140 psi. The tape shall also be capable of a 90 degree peel adhesion of at least 25 lbs./in. Apply the tape per manufacturer's instructions and as shown on standard drawings.

SECTION 1093
RETROREFLECTIVE SHEETING

1093-1 GENERAL

This section includes requirements for flexible retroreflective sheeting designed to reflectorize highway signs, delineators, barricades, and other devices. The retroreflective sheeting shall consist of white or colored sheeting having a smooth outer surface and the property of a retroreflector over its entire surface.

Retroreflective sheeting shall meet the requirements of ASTM D-4956, and all the requirements of these Specifications. In case of conflict, the requirements of the Standard Specifications will prevail.

The reflective material specified herein is intended for use on surfaces of various traffic control devices, including drums, barricades, traffic cones, and highway signs, to assure their adequate visibility at all times upon exposure to a light source when totally dry or wet. Provide reflectorization that produces a wide-angle retroreflectivity, enhancing nighttime visibility. This retroreflective sheeting shall consist of encapsulated or enclosed lens or microprismatic elements embedded with a transparent plastic having a smooth, flat outer surface. Provide material that is flexible, of good appearance, free from ragged edges, cracks, and extraneous materials, and exhibits good quality workmanship.

1093-2 PHYSICAL REQUIREMENTS

(A) Prequalification

Obtain retroreflective sheeting on the Traffic Engineering Qualified Products List (QPL) for permanent sign sheeting. While the specific products are in the pre-qualification process, the product will be assigned the status of *TU* Trial Use. After satisfactorily completing the QPL process, the product will be assigned the status of *AU* Approved for Use.

(1) Approved Products List

To be approved for the QPL, the manufacturer shall satisfactorily complete item (a) or (b), and (c) below:

(a) National Transportation Product Evaluation Program

Provide certified test data showing that the representative production material of the type and colors, and films and inks to be supplied has met the requirements for the accelerated outdoor weathering. Weather

the sample test panels at a test facility run by the AASHTO National Transportation Product Evaluation Program.

Meet all requirements of the Specifications for the specific type of sheeting after weathering. See Subarticle 1093-2 (E) (14).

(b) Similar Climatic Conditions

Provide written documentation that the representative production material of the type and colors, and films and inks to be supplied has been used successfully in a substantial traffic signing program in similar climatic conditions for at least two years.

Meet the requirements of the Specifications and in the judgment of the Engineer; demonstrate the capability of meeting the requirements of Subarticle 1093-2 (E)(16) - Field Performance for the specific type of sheeting during use.

(c) Department of Transportation and the N. C. Department of Correction Pre-qualification Fabrication Testing

Time frames for beginning testing will be at the discretion of the Department. The testing will consist of the sign fabrication process and an observation period. During the testing, meet all the requirements of the current contract for the sheeting type held by NCDOA and meet all the requirements of the Specifications for the specific type of sheeting.

Provide the following for testing:

All required materials, including inks, processing colors and additives and any special packaging requirements for the specified project at a cost equal to or less than the current contract for the sheeting type held by the NCDOA.

A warranty on the signs equal to that of the current contract for the sheeting type held by NCDOA.

An on-site technical service and support representative during the initial fabrication of the test signs.

The necessary technical service, training, and support in order to have the sheeting material fully evaluated during the sign fabrication process.

The testing will consist of the sign fabrication process.

During the testing, meet all requirements of the Specifications and in the judgment of the Engineer, demonstrate the capability of meeting the requirements of 1093-2 (E)(9) - Field Performance for the specific type of sheeting.

(2) Re-Qualification

When changes have been made in the composition and/or manufacturing process of a preapproved material, a reevaluation of the

performance may be required. Changes that are detected in composition and/or manufacturing process, which have not been reported by the manufacturer to the State Traffic Engineer in writing prior to the Department receiving the material, may be grounds for removal of that material from the QPL and termination of the contract.

(B) Reference Documents

The following documents, of the issues in effect on the date of invitation for bids or request for proposal, form a part of this Specification:

ASTM D-4956-04 *Standard Specifications for Retroreflective Sheeting for Traffic Control*

(C) Classification

Retroreflective sheeting consists of white or colored sheeting having a smooth outer surface that has retroreflective properties over its entire surface.

(D) Test Panels

Unless otherwise specified herein, when tests are to be performed using test panels, apply the specimens of retroreflective material to smooth aluminum cut from ASTM B-209 Alloy 5052-H38, 3004-H38 or 6061-T6 sheets on 0.315 in, 0.394 in, or 0.063 in thickness and reclaimed aluminum with 120 grit finish of the same thickness. Use aluminum that is chromate conversion coated in accordance with Department of Correction standard manufacturing procedures before the specimens are applied. Apply the specimens to panels in accordance with the manuals of the retroreflective sheeting manufacturer.

(E) Performance and Test Requirements

(1) Certification

Submit with each lot or shipment a certification that states that the material supplied will meet all the requirements listed herein.

(2) General Characteristics

Supply retroreflective sheeting that is free from damage, free from ragged edges, cracks, cuts, abrasions and extraneous materials on the surface of the material or on any layer of the material.

Furnish the retroreflective sheeting in rolls or sheets. When furnished in continuous rolls, the average number of splices shall not be more than 4 per 150 feet roll or more than 7 per 301 feet roll of material. Overlap splices 0.394 in + 0.118 in and suitable for continuous application as furnished.

The retroreflective sheeting surface shall be solvent resistant such that it may be cleaned with gasoline, VM&P naphtha, mineral spirits, turpentine, methanol, or xylol without damage to the material.

(3) Color

Maintain uniform color throughout the length of each roll (devoid of streaks). Maintain uniform nighttime reflected colors, devoid of streaks, and appear the same as daytime colors throughout the warranted service life.

(4) Screening Inks

Furnish a list of inks and clears (and the manufacturers thereof) which are compatible with and acceptable for use with the sheeting offered, without voiding the warranty. Inks are to be one part. The inks listed shall not require oven curing to achieve optimal bond to the sheeting. All inks shall be compatible with both jetzone conveyor and conventional drying ovens. When the standard highway color inks are applied to the sheeting in accordance with the manufacturer's manuals, meet 1093-2 (E)(5) and have the same satisfactory performance life noted in Table 1093-10 for the finished signs. Meet the requirements of the Department Furnished and Contractor Furnished sign Specification for ink separation and non-wets when applied per the manufacturer's manuals.

(5) Coefficient of Retroreflection

Determine the coefficients of retroreflection in accordance with ASTM D4956, for the minimum requirements of Tables 1093-1 through 1093-9 as specified.

TABLE 1093-1

Minimum Coefficient of Retroreflection for Type I
(Candelas Per Lux Per Square Meter)

Observation	Entrance							
Angle (o)	Angle (o)	White	Yellow	Green	Red	Blue	Brown	Orange
0.2	-4.0	70.0	50.0	9.0	14.5	4.0	1.0	25.0
0.2	30.0	30.0	22.0	3.5	6.0	1.7	0.3	7.0
0.5	-4.0	30.0	25.0	4.5	7.5	2.0	0.3	13.0
0.5	30.0	15.0	13.0	2.2	3.0	0.8	0.2	4.0

TABLE 1093-2

Minimum Coefficient of Retroreflection for Type III
(Candelas Per Lux Per Square Meter)

Observation	Entrance							
Angle (o)	Angle (o)	White	Yellow	Green	Red	Blue	Brown	Orange
0.2	-4.0	250.0	170.0	45.0	45.0	20.0	12.0	100.0
0.2	30.0	150.0	100.0	25.0	25.0	11.0	8.5	60.0
0.5	-4.0	95.0	62.0	15.0	15.0	7.5	5.0	30.0
0.5	30.0	65.0	45.0	10.0	10.0	5.0	3.5	25.0

TABLE 1093-3
Minimum Coefficient of Retroreflection for Type IV
(Candelas Per Lux Per Square Meter)

Obser-vation	Entrance								Fluorescent	Fluorescent	Fluorescent
Angle (o)	Angle (o)	White	Yellow	Orange	Green	Red	Blue	Brown	Yellow Green	Yellow	Orange
0.2	-4.0	360	270	145	50	65	30	18	290	220	105
0.2	30.0	170	135	68	25	30	14	8.5	135	100	50
0.5	-4.0	150	110	60	21	27	13	7.5	120	90	45
0.5	30.0	72	54	28	10	13	6	3.5	55	40	22

TABLE 1093-4
Minimum Coefficient of Retroreflection for Type V
(Candelas Per Lux Per Square Meter)

Observation	Entrance						
Angle (o)	Angle (o)	White	Yellow	Green	Red	Blue	Orange
0.2	-4.0	700.0	470.0	120.0	120.0	56.0	280.0
0.2	30.0	400.0	270.0	72.0	72.0	32.0	160.0
0.5	-4.0	160.0	110.0	28.0	28.0	13.0	64.0
0.5	30.0	75.0	51.0	13.0	13.0	6.0	30.0

TABLE 1093-5
Minimum Coefficient of Retroreflection for Type VI
(Candelas Per Lux Per Square Meter)

Obser-vation	Entrance							Fluorescent	Fluorescent	Fluorescent
Angle (o)	Angle (o)	White	Yellow	Orange	Green	Red	Blue	Yellow Green	Yellow	Orange
0.2	-4.0	500	350	125	60	70	45	400	300	200
0.2	30.0	200	140	50	24	28	18	160	120	80
0.5	-4.0	225	160	56	27	32	20	180	135	90
0.5	30.0	85	60	21	10	12	7.7	68	51	34

TABLE 1093-6
Minimum Coefficient of Retroreflection for Type VII
(Candelas Per Lux Per Square Meter)

Obser-vation	Entrance							Fluorescent	Fluorescent	Fluorescent
Angle (o)	Angle (o)	White	Yellow	Orange	Green	Red	Blue	Yellow Green	Yellow	Orange
0.2	-4.0	750	560	280	75	150	34	600	450	230
0.2	30.0	430	320	160	43	86	20	340	260	130
0.5	-4.0	240	180	90	24	48	11	190	145	72
0.5	30.0	135	100	50	14	27	6	110	81	41

TABLE 1093-7
Minimum Coefficient of Retroreflection for Type VIII
(Candelas Per Lux Per Square Meter)

Obser-vation	Entrance								Fluorescent	Fluorescent	Fluorescent
Angle (o)	Angle (o)	White	Yellow	Orange	Green	Red	Blue	Brown	Yellow Green	Yellow	Orange
0.2	-4.0	700	525	265	70	105	42	21	560	420	210
0.2	30.0	325	245	120	33	49	20	10	260	200	95
0.5	-4.0	250	190	94	25	38	15	7.5	200	150	75
0.5	30.0	115	86	43	12	17	7	3.5	92	69	35

TABLE 1093-8
Minimum Coefficient of Retroreflection for Type IX
(Candelas Per Lux Per Square Meter)

Obser-vation	Entrance							Fluorescent	Fluorescent	Fluorescent
Angle (o)	Angle (o)	White	Yellow	Orange	Green	Red	Blue	Yellow Green	Yellow	Orange
0.2	-4.0	380	285	145	38	76	17	300	230	115
0.2	30.0	215	162	82	22	43	10	170	130	65
0.5	-4.0	240	180	90	24	48	11	190	145	72
0.5	30.0	135	100	50	14	27	6	110	81	41
1.0	-4.0	80	60	30	8	16	3.6	64	48	24
1.0	30.0	45	34	17	4.5	9	2	36	27	14

TABLE 1093-9
Minimum Coefficient of Retroreflection for Type X
(Candelas Per Lux Per Square Meter)

Obser-vation	Entrance								Fluorescent	Fluorescent	Fluorescent
Angle (o)	Angle (o)	White	Yellow	Orange	Green	Red	Blue	Brown	Yellow Green	Yellow	Orange
0.2	-4.0	560	420	210	56	84	28	17	450	340	170
0.2	30.0	280	210	105	28	42	14	8.4	220	170	84
0.5	-4.0	200	150	75	20	30	10	6	160	120	60
0.5	30.0	100	75	37	10	15	5	3	80	60	30

For areas printed with transparent colors, the coefficient of retroreflection shall not be less than 70% of the values for the corresponding color in Tables 1093-1 through 1093-9.

(6) Color Processing

Maintain heat resistance and permit curing without staining of applied or unapplied sheeting at temperatures recommended by the sheeting manufacturer.

(7) Adhesive

Utilize a precoated pressure sensitive adhesive (Class 1) or a tack-free adhesive (Class 2) activated by heat applied in a vacuum applicator in a manner recommended by the sheeting manufacturer's manuals, which is capable of being applied to new aluminum without additional adhesive coats on the reflective sheeting or substrate material. Protect the adhesive by an easily removable liner.

When reclaimed aluminum is used, the adhesive shall adhere to reclaimed aluminum with a minimum 120 grit finish without additional adhesive coats. Sheeting will be applied immediately or aluminum will be processed by chromate conversion.

(8) Outdoor Weathering

The sample test panels will be weathered at test facilities run by the AASHTO National Transportation Product Evaluation Program. Maintain a weather resistant retroreflective surface that shows no cracking, blistering, crazing, dimensional change or delaminating during the exposure period. At the end of the exposure period, conform to the requirements of Table 1093-10 as appropriate for the sheeting type.

(9) Field Performance

The fabricating agency will date all signs (month, year) at the completion of fabrication. That date constitutes the start of the field performance obligation period.

The retroreflective sheeting will be considered unsatisfactory if it has deteriorated due to any cause except defacement resulting from vandalism or damage resulting from impact by a motor vehicle or other object to the extent that

(a) The sign is ineffective for its intended purpose when viewed from a moving vehicle under normal day and night driving conditions, or

(b) The coefficient of retroreflection is less than the minimum specified for that sheeting during that period listed in Table 1093-10 when measured by the Delta RetroSign retroreflectometer, or

(c) The screened message and border or reverse screened background has stained, discolored, streaked, faded, turned dark or has developed cracks, scaling, pitting and/or blistering, or

(d) The sign is unsatisfactory with regard to uniform appearance due to cracking, streaking, delamination, blistering, crazing, or discoloration of the sheeting, or

(e) The sign is unsatisfactory with regard to remaining uniform in color over the entire reflecting surface both day and night and displaying the same color both in daylight and under lights at night.

(i) For glass bead material, sheeting will be subjected to a visual test with the human eye as the test instrument. Objectionable non-uniformity of color and reflectivity (retroreflection) under light at night is cause for the sign to be tested for retroreflection to determine compliance with the following requirements:

The retroreflection values on any sign shall not vary from each other by more than a ratio of 1.10 (1.20 white) at any two points at least 12 in apart, nor more than 1.30 (1.30 white) at any two points anywhere on the sign, nor more than, 1.10 (1.20 white) at any two points on the border or between any two adjacent letters, numerals, or symbols. Failure to meet the above requirements will result in sign rejection. Retroreflection will be tested using a Delta RetroSign Retroreflectometer.

(ii) For prismatic material, sheeting will be subjected to a visual test with the human eye as the test instrument.

TABLE 1093-10
MINIMUM COEFFICIENT OF RETROREFLECTION
Candelas per Lux per Square Meter
(.2° DIV. and -4° INCIDENCE) (*)

Type	Months [A]	Minimum Coefficient of Retroreflection
I	24[B]	50% of Table 1
III	36[B]	80% of Table 2
IV	36[B]	80% of Table 3
V	36[B]	80% of Table 4
VI	6	50% of Table 5
VII	36[B]	80% of Table 6
VIII	36[B]	80% of Table 7
IX	36[B]	80% of Table 8
X	36[B]	80% of Table 9

(*) Make all measurements after sign cleaning.
[A] Testing at shorter intervals may be done to gather additional information
[B] When the colors yellow, white, or fluorescent orange are specified for construction work zone applications, the outdoor weathering time will be 12 months.

(F) Manufacturer's Warranty and Obligations

(1) Warranty

The sheeting manufacturer warrants to the Department that all materials furnished under this Specification will be new, of good components and workmanship and agrees to the following conditions.

Retroreflective sheeting processed and applied to sign blank materials in accordance with the manufacturer's manuals shall be warranted by the manufacturer to perform effectively as stated in 1093 (E)(9) Field Performance. The manufacturer's manuals shall contain a complete descriptive explanation of all the requirements necessary of the sign fabricator.

(2) Obligation

Where the Specification and performance requirements have not been met, cover the sign costs as follows for each sheeting type.

(a) All Sheeting Types

When material fails to meet the Specification, prior to being applied to the sign blanks, give a financial credit for all defective sheeting at no cost to the Department. If the Department decides to use the sheeting, that in no way relieves the sheeting manufacturer from the obligation of the financial credit for the defective sheeting.

When material fails to meet the Specifications, after being applied to the sign blanks, while still at the sign fabricators facility, give a financial credit for all defective sheeting and cover the cost of the sign(s) at no cost to the Department. If the Department accepts the sign, that in no way relieves the sheeting manufacturer from the obligation of financial credit for the defective sheeting and covering the cost of the sign(s).

When material fails to meet the Specifications, after being installed, comply with 1093 (F)(2)(b) or (c) for the material type. In lieu of covering the cost as describe in 1093(F)(2)(b) or (c) below, the sheeting manufacturer may request to complete the work as required. The request shall include the name of the sign manufacturer, the name of the contractor who will install the signs, and a completion date for the work. The request will be reviewed for acceptance by the Department.

The sign fabricator shall use due diligence and not knowingly produce signs using defective sheeting. The ultimate responsibility for the sheeting quality is with the sheeting manufacturer. The sign fabricator is not required by the sheeting manufacturer to inspect the sheeting prior to use.

(b) Type I

Years 1 through 4 (years 1 through 3-orange) - Cover the cost of restoring the sign face in its field location to its original effectiveness including removal, materials, fabrication, erection, labor and equipment.

Years 5 through 7 (N/A for orange) -Replace the sheeting required to restore the sign face to its original effectiveness.

(c) Type III, IV, VII, VIII, IX, and X

Years 1 through 7 (years 1 through 2- fluorescent orange) - Cover the cost of restoring the sign face in its field location to its original effectiveness at no cost to the Department for materials, labor and equipment. In addition to the reflective requirements for Type VII, VIII, and IX fluorescent orange, the sheeting shall maintain a total Luminance Factor (Y) of 25 (ASTM D4956) and a Fluorescence Luminance Factor (Y_F) of 13% (ASTM E2301) for 3 years. Maintain 80% of fluorescent orange sheeting reflectivity for years 1 and 2.

Years 8 through 10 (year 3 fluorescent orange) -Replace the sheeting required to restore the sign face to its original effectiveness. Maintain 50% of fluorescent orange sheeting reflectivity for year 3.

Years 11 through 12 - Replace 50% of the sheeting required to restore the sign face to its original effectiveness.

(G) Packaging

Pack the sheeting, rolls and sheets, snugly in corrugated fiberboard cartons, in accordance with commercially accepted standards. Stipulate clearly on each carton the brand, quantity, size, lot and run or drum number, color, type adhesive, invoice number/shipping number and month and year of manufacture on the end of the carton. Furnish retroreflective sheeting suitable for use when stored under NCDOC and NCDOT existing conditions for a maximum period of 18 months.

(H) Technical Assistance Requirements

Provide competent product information and technical services for the sheeting, inks and incidentals

(1) Instruction and Training

Have available instruction and training on an annual basis at no additional cost, including but not limiting training films or video tapes (if available), material application, equipment operation, silk screening techniques, packaging, storage and other proven sign shop practices as they apply to the reflective sheeting supplied by the manufacturer, and to assure that the resulting signs can comply with the applicable Specifications.

(2) Technical Assistance

To ensure continued quality sign manufacture, without additional cost, provide the State sign manufacturing facilities with on-site technical maintenance service by a qualified technician at the sign fabrication facilities designated by the DOC or DOT, as required. This technical service will include service for any process color or ink recommended insofar as it relates to the processing application on the sheeting.

Have available emergency on-site technical service without cost to the Department within 48 hours, Monday through Friday, and 72 hours during a weekend, upon proper notification by a fabricating agency of a production problem.

Provide a list of the technical service personnel and their qualifications to the Department.

(3) Inspection

All DOC, DOT and designated agencies shall be inspected by a qualified technician for conformance to manufacturer's recommendations as stated in their manuals for warranty purposes on a semi-annual basis without cost to the Department. A written report of any discrepancy from those stated in the manufacture's manual will be made to that agency and to the Department.

(4) Equipment

Provide technical service for recommended sheeting application, using owner's equipment, and certify that factory trained personnel will be available on 48 hours notice to render such service. "Service" is understood to mean the capability of calibration and trouble shooting, as well as the training and retraining of owner's personnel as required.

(I) Compliance

Failure to comply with this Specification is grounds for default of contract.

1093-3 CERTIFICATION

Have the retroreflective sheeting manufacturer provide certified test data showing that representative production material of the type to be supplied has met the requirements for accelerated weathering described elsewhere in this Specification.

Provide a Type 6 Supplier's certification for all retroreflective sheeting used in the manufacture of signs certifying that the sheeting meets all the requirements of Section 1093.

SECTION 1094
GROUND MOUNTED SIGNS

1094-1 GROUND-MOUNTED SIGN SUPPORTS.

(A) Breakaway or Simple Steel Beam Sign Supports

Fabricators of breakaway or simple steel beam sign supports shall be Category I Certified by the American Institute of Steel Construction.

Steel supports for Type A and B ground mounted signs shall be galvanized rolled steel sections, either breakaway or simple design, as required by the contract. Fabricate supports from plates, W shapes, and S shapes, as required by the contract, and they shall conform to ASTM A36. Splices in the supports will not be permitted. Perform galvanizing prior to assembly that conforms to ASTM A123. Cutting steel supports to length after they have been galvanized will not be permitted. The support(s) shall be uniformly straight to within 1/8" tolerance for pieces less than 20 feet in length, and 1/4" tolerance for pieces over 20 feet in length.

Fabricate high strength bolts, nuts, and washers required for breakaway supports from steel conforming to ASTM A325 and be galvanized in accordance with ASTM A153.

(B) 3-Lb. Steel U-Channel Posts

Make 3-lb. steel U-channel posts out of rerolled rail steel or new billet steel, conforming to the mechanical requirements of ASTM Specification A499, Grade 60, and the chemical requirements of ASTM A1, for rails having nominal weights of 91 pounds per yard or greater. Proportion the cross section so that a moment of 1,450 ft-lbs., applied to the cross section normal to the flanges, will produce an extreme fiber stress no greater than 39,500 psi. Use posts that weight 3 pounds per linear foot. Punch or drill all posts with 3/8" diameter holes on the centerline, spaced 1" on

centers, starting 1" from the top and extending to the bottom of the posts. Galvanize these posts after fabrication for the full length and total area in accordance with ASTM A123. The zinc coating inside of the 3/8" diameter holes shall not exceed Specification requirements enough to prevent a 5/16" diameter bolt from freely passing through.

Use U-channel post sections of the same general configuration as that shown in the contract, however minor variations may be considered acceptable by the Engineer provided all other requirements are met.

(C) 2-Lb. Steel U-Channel Posts

Use 2-lb. steel U-channel posts that are variable length galvanized steel, U-shaped channel posts.

Fabricate the U-channel posts from steel meeting the requirements of ASTM A366 or ASTM A499, or an approved alternate. The posts shall weigh 2 pounds per linear foot, and be of the length necessary to meet the erection requirements of the contract. Before galvanizing, punch or drill 3/8" diameter holes on 1" centers, beginning 1" from the top of the post, for a minimum distance equal to the vertical dimension of the respective sign or mile marker. Galvanize these posts after fabrication in accordance with ASTM A123. The zinc coating inside of the 3/8" diameter holes shall not exceed Specification requirements enough to prevent a 5/16" diameter bolt from freely passing through.

U-channel post sections shall be of the same general configuration as that shown in the contract, however, minor variations may be considered acceptable by the Engineer, provided all other requirements are met.

(D) Steel Square Tube Posts

Use steel square tube posts of variable length galvanized steel. The post shall be a minimum 14 gauge steel square tube. Before galvanizing punch or drill all posts with 3/8" diameter holes on the centerline, spaced 1" on centers, starting 1" from the top and extending to the bottom of the posts.

Galvanize these posts after fabrication for the full length and total area in accordance with ASTM A123. G90 zinc coating shall not be accepted. The zinc coating inside of the 3/8" diameter holes shall not exceed Specification requirements enough to prevent a 5/16" diameter bolt from freely passing through.

Steel square tube sections shall be of the same general configuration as that shown in the contract, however, minor variations may be considered acceptable by the Engineer, provided all other requirements are met.

(E) Wood Supports

Wood supports shall conform to Articles 1082-2 and 1082-3.

1094-2 RIVETS FOR SIGN OVERLAYS

Rivets for sign overlays shall be 1/8" diameter aluminum rivets of the pull through type, and be approved by the Engineer. Submit for approval several samples of rivets, along with adequate descriptive catalog literature.

SECTION 1096
OVERHEAD SIGN STRUCTURES

1096-1 ALUMINUM OVERHEAD SIGN STRUCTURES

Materials for aluminum overhead sign structures shall conform to the applicable requirements of Article 1092-1, and the requirements of the latest edition of the *AASHTO Standard Specifications for Structural Supports for Highway Signs, Luminaires and Traffic Signals* with the latest interim specifications. Where the Contractor proposes to use materials that are not covered by these references, such use will be contingent on the Engineer's approval of these materials.

1096-2 STEEL OVERHEAD SIGN STRUCTURES

Use Category I certified by the American Institute of Steel Construction Fabricators for steel overhead sign structures as required by Section 1072-1 (A). Use either structural carbon steel or structural low-alloy steel for steel overhead sign structures meeting the requirements of the *Standard Specifications for Highway Bridges*. Other steel may be used, subject to the approval of the Engineer. Structural steel that has been cold-rolled to increase the yield strength will be permitted. Mechanically galvanize all fasteners. Hot-dip galvanize all other components of the structural assembly after fabrication has been completed. The galvanizing shall meet the requirements of ASTM A153 for fasteners and of ASTM A123 for other structural steel.

1096-3 WELDING

Perform all welding in the fabrication of the supports by AWS certified welders. Furnish a copy of the AWS certification for each welder used for fabrication. All welds shall be free of cracks, blow holes, slag, and other irregularities, and be wire brushed, sandblasted, or otherwise cleaned.

Aluminum welding processes and procedures, shielding gases, preparation, weld quality, inspection and correction of welds, and the qualification of welding procedures, welders, and welding operators will be governed by the latest edition of AWS Structural Welding Code, D1.2 -- Aluminum as described in the *Standard Specifications for Structural Supports for Highway Signs, Luminaires and Traffic Signals*.

The welding of steel components, including structural details, filler metal, workmanship and technique, qualification and inspection will be based on the applicable requirements of the AWS Bridge Welding Code, D1.5.

SECTION 1097
SIGN LIGHTING SYSTEMS.

1097-1 ELECTRICAL INDUSTRY STANDARDS

An electrical industry standards organization acceptable to the Engineer shall label or list all electrical materials. The listing organization shall maintain periodic inspection of the production of materials and shall, by the labeling or listing procedure, verify that the materials comply with appropriate standards of performance or are suitable for use in

a specified manner. Provide Underwriters Laboratories (UL) labeled and listed materials whenever such labeling and listing is available for such materials.

1097-2 HIGH PRESSURE SODIUM LUMINAIRES

Use luminaires which provide an average of 30 ±2 maintained footcandles, with a maximum to minimum uniformity ratio of no more than 5:1 on the sign face at 77° F. Use luminaires that provide this intensity as a minimum average after applying a lamp lumen depreciation (LLD) factor of 0.90 and a luminaire dirt depreciation (LDD) factor of 0.90.

Use single-lamp type luminaires with heavy-duty mogul lamp socket and lamp grip, and with the ballast mounted internally or immediately adjacent. Use luminaires that provide the required lighting intensity when spaced as shown in the contract or on approved shop drawings.

Use luminaire and ballast enclosures constructed of corrosive-resistant steel or aluminum material with sealed, charcoal filtered optics. Provide luminaires that have access doors with hinges and latches.

Use a glass refractor or lens that is tempered for resistance to shock and thermal stresses, and which is single-piece prismatic-molded with appropriate reflector inserts. Use gaskets made of neoprene, silicone, rubber, or continuous sponge rubber types, and that are adequate to keep out moisture, dust and insects.

Use ballasts that are 120-volt, 60-cycle, constant wattage, autotransformer type, and which conform to ANSI S54 for 100W luminaires, ANSI S55 for 150-watt luminaires, ANSI S50 for 250-watt luminaires, or ANSI S51 for 400-watt luminaires. Use only ballasts which have power factor ratings of 90% or higher, and are capable of starting the lamp at -20° Fahrenheit. Use ballasts that provide the starting and operating current specified in shop drawings or catalog cuts.

Provide luminaires that have a wattage rating as shown in the contract or on approved shop drawings. Use luminaires constructed in such a way that no live parts are exposed when the lamp is replaced. Terminate all wiring connections for lamps and ballasts on terminal blocks, with all wiring clearly identified by color and/or number.

Use UL listed luminaires labeled for wet locations and which conform to UL Standard 1572 High Intensity Discharge Lighting.

1097-3 LAMPS

Use lamps that conform to ANSI specifications, and are of the wattage shown in the contract. Unless otherwise shown in the contract, use clear high pressure sodium lamps of ANSI types S54SB-100 (100-watt), S55SC-150 (150-watt), S50VA-250/S (250-watt), or S51WA-400 (400-watt). Use only lamps rated at 23,000 hours life for continuous duty and 24,000 hours life for intermittent operation. Ensure that lamp output designations and ballast ratings agree. Use only heavy-duty mogul type bases.

1097-4 FORMED CHANNEL

Use only hot-dipped galvanized steel or extruded aluminum formed channels. Use steel channels that meet the requirements of ASTM A36 and are hot-dipped galvanized in

accordance with ASTM A123. Use steel fittings, nuts, bolts, washers, and related hardware with steel channels, and which meet the requirements of ASTM A307 and are hot-dipped galvanized in accordance with ASTM A153. Use alloy 6061-T6 extruded aluminum channels, nuts, and bolts, alloy 7075 lock-washers, and Alclad 2024 flat washers. You may use stainless steel hardware with either aluminum or hot-dipped galvanized steel channels.

1097-5 CONDUIT, BOXES, AND FITTINGS

Use conduit, boxes, and fittings of the type and size shown in the contract.

Use metallic conduit and duct that is rigid hot-dipped galvanized steel and meets the requirements of UL Standard 6 Rigid Metallic Conduit, with rigid full weight sherardized or galvanized threaded fittings.

Use rigid PVC (polyvinyl chloride) heavy wall non-metallic conduit and duct approved for above ground and underground use without concrete encasement in accordance with UL Standard 651 Rigid Non-Metallic Conduit.

Use liquid-tight metallic flexible conduit meeting the requirements of UL Standard 360 Liquid-Tight Flexible Steel Conduit, Electrical that is acceptable for equipment grounding, with insulated throat, grounding, and malleable iron watertight fittings.

Use watertight hot-dipped galvanized steel conduit bodies, boxes, and fittings meeting the requirements of UL Standard 514 B Fittings for Conduit and Outlet Boxes.

1097-6 WIRE AND CABLE

Use only stranded copper conductors, unless otherwise shown in the contract or Specifications. Provide wire and cable with identification labels or tags on either the wire or cable itself or on the coil, reel, or smallest container in which the product is packaged when delivered to the project. Show the manufacturer's name, gauge, UL symbol, and type of wire or cable on the identification label or tag.

Use wire and cable of the type and size shown in the contract, and which meets the requirements of the following standards:

UL Standard 44,	Rubber-Insulated Wires and Cables
UL Standard 83,	Thermoplastic-Insulated Wires and Cables
UL Standard 493,	Thermoplastic-Insulated Underground Feeder and Branch-Circuit Cables
UL Standard 719,	Nonmetallic-Sheathed Cable
UL Standard 854,	Service-Entrance Cables
UL Standard 1063,	Machine-Tool Wires and Cables
UL Standard 1581,	The Reference Standard for Electrical Wires, Cables, and Flexible Cords

1097-7 POLES

Provide treated poles that meet the requirements of Article 1082. Use 30' Class 5 poles unless otherwise shown in the contract.

1097-8 SWITCHES

Use safety disconnect switches rated as shown in the contract, and which meet the requirements of UL Standard 98 Enclosed and Dead-Front Switches. Use heavy duty, NEMA 3R disconnect switches with provisions for locking by padlock, and with neat and permanent labels as shown on the contract.

1097-9 CIRCUIT BREAKERS AND PANELS

Use circuit breakers and panels that meet the requirements of UL Standard 489 Molded-Case Circuit Breakers and Circuit-Breaker Enclosures, and UL Standard 67 Electric Panelboards.

Use only molded case, thermal magnetic trip type breakers. Use circuit breakers and circuit breaker panelboard with NEMA 3R enclosures, marked as suitable for use as service equipment, and neatly and permanently labeled as shown on the contract. Provide only circuit breaker panelboard enclosures that are lockable with padlocks.

1097-10 PHOTOCELL CONTROLLERS

Use plug-in photo-controllers of the cadmium-sulfide type, suitable for use in an operating voltage range of 105-285 volts and nominal control voltages of 120, 208, 240, and 277 volts. Use a control rated for 1000 watts resistive load or 1800 volt-amperes inductive load with a light-level setting that is within a range of 1.0 to 3.0 footcandles at 120 volts.

Use controls that have internal protection for surges in excess of 2000 volts peak. Provide a receptacle suitable for mounting directly to the top of a pole. Use a control and receptacle that conform to NEMA Standard SH16 Physical and Electrical Interchangeability of Light Sensitive Control Devices Used in the Control of Roadway Lighting, and neatly and permanently label them as shown on the contract.

1097-11 CONTACTORS

Use electrically held contactors which are full current rated for the control of fluorescent and HID lighting loads, and which are 60 amp, 2 pole with 120 VAC coil unless otherwise called for in the contract. Use NEMA designed contactors with replaceable coil and contacts, which are controlled by a selector switch and photo control as shown in the contract, and which are neatly and permanently labeled as shown on the contract.

Provide an enclosure for the contactor which is a lockable (with padlock) NEMA 3R unit and includes an internally mounted selector switch, control circuit fuse, neutral bar, and equipment grounding bar if shown in the contract.

Use a contactor and enclosure that conform to UL Standard 508 Electric Industrial Control Equipment.

1097-12 TRANSFORMERS

Use transformers of single-phase, dry, step-down voltage (480 V-240/120 V) type, rated for outdoor use (NEMA 3R), of the size (KVA) noted in the contract, and which conform to UL Standard 506 Specialty Transformers.

1097-13 ENCLOSURES

Provide stainless steel NEMA 4X enclosures when the enclosure contains a combination of electrical components, including switches, circuit breakers, and contactors. Use enclosures of the size shown in the contract conforming to UL Standard 508 Electric Industrial Control Equipment. Use an enclosure with a gasket door lockable by padlock, with a 2 or 3 point latching mechanism, and with a painted back panel for mounting components. Use enclosures that have external integral mounting lugs or mounting lugs that are factory welded to the enclosure. If shown in the contract, mount a handle in the flange of the enclosure to operate a circuit breaker or disconnect switch. Use an operator handle that can be locked in the ON position, and that is interlocked with the latching mechanism to prevent opening of the door when in the ON position except with safety over-ride devices. Provide a plan pocket on the inside of the door.

Provide a mill finish aluminum meter base acceptable to the utility company that provides the power.

1097-14 LOCKS

Use key operated, pin tumbler, dead bolt padlocks with brass or bronze shackle and case, meeting the requirements of Military Specification MIL-P-17802E (Grade I, Class 2, Size 2, Style A). Key all padlocks alike.

1097-15 STRAPPING AND HARDWARE

Use stainless steel straps and buckles, meeting the requirements of ASTM A666 which are a minimum of 1/2" wide and .030" thick and which are capable of withstanding a breaking strength tension pull of 1500 pounds before failure.

Use 1/4" stud type concrete expansion anchors which provide a minimum safe holding capacity of 550 pounds , based on 25% of the actual pullout capacity of the anchor in 3000 psi concrete, as determined by an approved testing laboratory.

Use only aluminum, stainless steel, or hot-dipped galvanized steel hangers, screws, lags, bolts, nuts, or other devices used to support conduit.

1097-16 GROUNDING AND BONDING EQUIPMENT

Use ground clamps, grounding and bonding bushings, lock nuts, and grounding electrodes that comply with UL Standard 467 Electric Grounding and Bonding Equipment. Use 5/8" diameter, 10 foot long, copper-clad steel ground rods.

SECTION 1098
SIGNALS AND INTELLIGENT TRANSPORTATION SYSTEMS MATERIALS

1098-1 GENERAL REQUIREMENTS

(A) Qualified Products

Furnish new equipment, materials, and hardware unless otherwise required. Inscribe manufacturer's name, model number, serial number, and any additional information

needed for proper identification on each piece of equipment housed in a case or housing.

Signal Equipment Qualified Products List (QPL) is available on the Department's website.

Certain signal and communications equipment, material, and hardware shall be pre-approved on the QPL by the date of installation. Equipment, material, and hardware not pre-approved when required will not be allowed for use on the project. Consult the QPL web site to obtain pre-approval procedures.

(B) Submittal Requirements

Provide written certification to the Department that all Contractor-furnished material is in accordance with the contract. When requested by the Department, provide additional certifications from independent testing laboratories and sufficient data to verify item meets applicable Specifications. Ensure additional certification states the testing laboratory is independent of the material manufacturer and neither the laboratory nor the manufacturer has a vested interest in the other.

Identify all proprietary parts in Contractor-furnished material. The Department reserves the right to reject material that uses proprietary components not commercially available through electronic supply houses.

For Contractor-furnished material listed on the QPL, furnish submittals in the format defined by the QPL.

For Contractor-furnished material not on the QPL, furnish three copies of the equipment list including three copies of catalog cuts. Identify proposed material on catalog cuts by a reproducible means (highlighter pen does not transfer to copies). Ensure material lists contain material description, brand name, manufacturer's address and telephone number, stock number, size, identifying trademark or symbol, and other appropriate ratings.

Do not fabricate or order material until receipt of the Engineer's approval.

(C) Observation Period

Warrant workmanship and Contractor-furnished equipment for a 30-day observation period under the payment and performance bond from date of acceptance.

If workmanship or equipment fails during the 30-day observation period, repair or replace with new equipment and begin a new 30-day observation period.

The observation period for this work is not part of the work to be completed by the project completion date.

(D) Warranties

Unless otherwise required herein, provide manufacturer's warranties on Contractor-furnished equipment for material and workmanship that are customarily issued by the equipment manufacturer and that are at least two years in length from successful completion of the 30-day observation period. Include unconditional coverage for all

parts and labor necessary or incidental to repair of defective equipment or workmanship and malfunctions that arise during warranty period.

Ensure all contractor-furnished equipment, including pieces and components of equipment, hardware, firmware, software, middleware, internal components, and subroutines which perform any date or time data recognition function, calculation, or sequencing will support a four digit year format for a period of at least 50 years.

Upon successful completion of the 30-day observation period, transfer manufacturer's warranties with proper validation by the manufacturer to the Department or its designated maintaining agency.

(E) Firmware Licensing and Upgrades

Provide the Department with a license to duplicate all programmable devices in equipment for maintenance and software upgrades. Provide binary or hexadecimal format files for each device that may be programmed by the Department. Ensure files are provided on PC compatible compact disks or other approved media.

Ensure firmware performance upgrades that occur during the contract period are available to the Department at no additional cost.

Make firmware upgrades that are developed to correct operating characteristics available to the Department at no additional cost until the warranty period expires.

(F) Plan of Record Documentation

Before final acceptance, furnish plan of record documentation of all fieldwork. Plan of record documentation will be subject to approval before final acceptance. Store documentation in a manila envelope placed in a weatherproof holder mounted within each cabinet or housing for easy access.

Except for standard bound manuals, bind all 8 1/2" x 11" documentation, including 11" x 17" drawings folded to 8 1/2" x 11", in logical groupings in either 3-ring or plastic slide-ring loose-leaf binders. Permanently label each grouping of documentation.

Provide manual, electrical schematic diagram, and cabinet wiring diagram for each control equipment cabinet and piece of equipment in cabinet. Place manuals and prints in weatherproof holder. For wiring diagrams and electrical schematic diagrams not bound into printed manuals, provide copies at least 22" x 34".

Provide Operator's Manuals containing detailed operating instructions for each different type or model of equipment. Ensure manuals contain instructions for possible modification to equipment.

Provide maintenance procedures manuals containing detailed preventive and corrective maintenance procedures for each different type or model of equipment.

Provide detailed wiring diagrams that include interconnection of equipment with pin-out configurations, pin functions, and cable parts numbers. For communications systems, camera systems, video imaging loop emulator detection systems, intelligent transportation systems, closed loop signal systems, and other computerized systems,

provide two copies of system connection diagrams showing system interconnection cables and associated terminations.

Example:

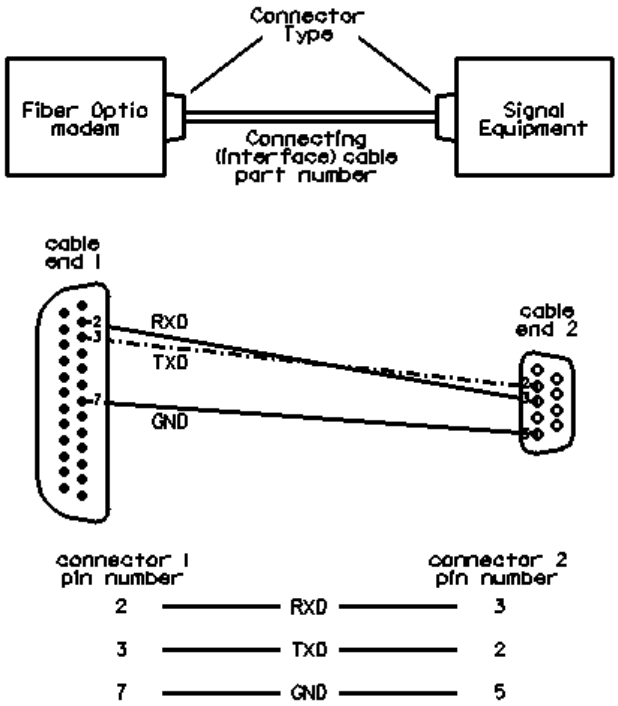

(G) Wire and Cable

Furnish wire and cable on reels. When requested by the Department, furnish samples of wire and cable to the Department at no additional cost.

Provide either 0.05" x 0.30" aluminum wrapping tape or 0.06" stainless steel lashing wire for lashing cables to messenger cable. Use 0.045" stainless steel lashing wire to lash fiber-optic communications cable to messenger cable.

(H) Electrical Service

Furnish external electrical service disconnects with single pole 50 ampere circuit breaker with a minimum of 10,000 RMS symmetrical amperes short circuit current rating in a lockable NEMA 3R enclosure. Ensure service disconnects are UL listed and marked as being suitable for use as service equipment. Fabricate enclosure from galvanized steel and electrostatically apply dry powder paint finish, light gray in color, to yield a minimum thickness of 2.4 mils. Provide ground bus and neutral bus with a minimum of four terminals with minimum wire capacity range of number 14 through number 4.

Furnish NEMA Type 3R outdoor enclosure, 100 Ampere rated meter base. Furnish 4 terminal, 600 volt, single phase, 3 wire meter base that complies with the following:

Line, Load, and Neutral Terminals accept #8 to 2/0 AWG Copper/Aluminum wire
Ringless Type without bypass

Made of galvanized steel
Meets Standard UL-414
Overhead or underground service entrance as specified

Provide meter bases with ampere rating of meter sockets based on sockets being wired with minimum of 167 degrees F insulated wire. Ensure meter bases have electrostatically applied dry powder paint finish, light gray in color, with minimum thickness of 2.4 mils.

Furnish 1" watertight hub for threaded rigid conduit with meter base.

If meter base and electrical service disconnect are supplied in the same enclosure, ensure assembly is UL listed and marked as being suitable for use as service equipment.

(I) Painting

Where painting of signal equipment cabinets, signal heads, signal poles, and pedestals is required, apply paint at the factory. No field painting will be allowed except when paint has been scratched or marred. In such cases, apply two field coats of the same color and grade enamel as the original paint to the scratched or marred portions.

1098-2 BACKPLATES

Comply with ITE standard *Vehicle Traffic Control Signal Head*. Provide backplates specific to the manufacturer of the vehicle signal heads.

Fabricate backplates for vehicle signal heads from sheet aluminum a minimum of 0.05" thick. Provide stainless steel fasteners for attachment to signal head.

Provide backplates painted an alkyd urea black synthetic baking enamel with minimum gloss reflectance that meets MIL-E-10169, *Enamel Heat Resisting, Instrument Black*.

Provide backplates that extend a minimum of 5" from the vehicle signal head outline. Ensure the backplate fills in the gaps between cluster-mounted vehicle signal sections (five-section vehicle signal heads). A 1/4" maximum gap between vehicle signal head and backplate, as viewed from the front, will be allowed.

1098-3 MESSENGER CABLE

Comply with ASTM A 475 for extra high strength grade wire strand, Class A zinc coating. Fabricate messenger cable from seven steel wires twisted into a single concentric strand.

Provide universal grade strandvises used for extra high strength steel messenger cable. Provide other pole line hardware constructed of hot-dipped galvanized steel. Provide machine bolts, eyebolts, and thimbleye bolts with minimum tensile strength of 12,400 lbs. Provide galvanized nuts, washers, and thimbleyelets.

1098-4 CONDUIT

(A) General

Use conduit bodies, boxes, and fittings that meet UL Standard 514B Conduit, Tubing, and Cable Fittings for electrical and communications installations.

(B) Conduit Types

(1) Rigid Metallic Conduit

Provide rigid hot dipped galvanized steel conduit that meets UL Standard 6 Electrical Rigid Metal Conduit-Steel with rigid full weight sherardized or galvanized threaded fittings.

(2) Polyvinyl Chloride (PVC)

Provide non-metallic conduit and duct including associated couplings, approved for above and below ground use with or without concrete encasement in accordance with UL Standard 651A *Type EB and A Rigid PVC Conduit and HDPE Conduit*. Provide Schedule 40 conduit unless otherwise specified.

(3) Liquid-Tight Metallic Flexible Conduit

Provide conduit that meets UL Standard 360 *Liquid-Tight Flexible Steel Conduit* that is acceptable for equipment grounding in accordance with the NEC. Ensure conduit has insulated throat and malleable iron watertight fittings.

(4) High Density Polyethylene Conduit (HDPE)

Provide HDPE conduit with an outer diameter to minimum wall thickness ratio that complies with ASTM D 3035, Standard Dimension Ratio (SDR) 13.6. Provide conduit that meets UL Standard 651B *Continuous Length HDPE Conduit*.

Provide conduit that meets the following:

ASTM D 638	Tensile Strength – 3,000 psi, min; Elongation – 400 percent, min
ASTM D 1238	Melt Index – 0.4 maximum
ASTM D 1505	Density – (0.941-0.955g/cc)
ASTM D 1693	Condition B – 20 percent failure, maximum
ASTM D 2444	Impact – NEMA Standards Publication Number TC7
ASTM D 3350	Cell Classification – 334420 or 344420

Ensure HDPE conduit is resistant to benzene, calcium chloride, ethyl alcohol, fuel oil, gasoline, lubricating oil, potassium chloride, sodium chloride, sodium nitrate, and transformer oil, and is protected against degradation due to oxidation and general corrosion. Furnish conduit with a coefficient of friction of 0.09 or less in accordance with Telcordia GR-356.

Furnish factory lubricated, low friction, coilable, conduit constructed of HDPE. Furnish conduit with nominal diameter as required. Provide conduit with smooth outer wall and ribbed inner wall. Ensure conduit is capable of being coiled on reels in continuous lengths, transported, stored outdoors, and

subsequently uncoiled for installation without affecting its properties or performance.

(C) Conduit Plugs, Pull Line, and Tracer Wire

Furnish duct plugs that provide a watertight barrier when installed in conduit. Furnish duct plugs sized in accordance with conduit. Ensure duct plug provides a means to secure a pull line to the end of the plug. Provide removable and re-usable duct plugs.

Furnish mechanical sealing devices that provide a watertight barrier between conduit and cables in conduit. Furnish mechanical sealing devices sized in accordance with conduit and with appropriately sized holes to accommodate and seal cables. Provide removable and re-usable mechanical sealing devices.

Furnish 1/2", pre-lubricated, woven polyester tape, pull line with minimum rated tensile strength of 2,500 lb.

Provide green insulated number 14 AWG, THW, stranded copper wire to serve as tracer wire.

Comply with Subarticle 1400-2(H) Duct and Conduit Sealer.

1098-5 JUNCTION BOXES

(A) General

Comply with Article 1411-2 Electrical Junction Boxes except as follows:

Provide junction box covers with standard *Traffic Signal* or *NCDOT Fiber Optic* logos, pull slots, and stainless steel pins.

Do not provide sealant compound between junction boxes and covers.

(B) Standard Sized Junction Boxes

Provide standard sized junction boxes with minimum inside dimensions of 16"(l) x 10"(w) x 10"(d) that meet or exceed the Tier 15 requirements of ANSI/SCTE 77. Provide certification that testing methods are compliant with ANSI/SCTE 77. Vertical extensions of 6" to 12" shall be available from the junction box manufacturer.

(C) Oversized Heavy-Duty Junction Boxes

Provide oversized heavy-duty junction boxes and covers with minimum inside dimensions of 30"(l) x 15"(w) x 24"(d) that meet or exceed the Tier 15 requirements of ANSI/SCTE 77. Provide certification that testing methods are compliant with ANSI/SCTE 77.

1098-6 WOOD POLES

Use treated wood poles meeting the requirements of Section 1082. Unless otherwise required by the contract, use Class 4 or better wood poles that have a minimum length of 40 feet and are of a sufficient length to maintain the minimum required clearances above the roadway, obstructions, and affected railroad tracks.

1098-7 GUY ASSEMBLIES

Furnish guy assemblies with anchor assemblies, guy cable, and guy cable guard.

Provide anchor assemblies with all miscellaneous hardware consisting of either expanding anchor with rod and tripleye attachment, screw anchor with extension rod and tripleye attachment, or expanding rock anchor with tripleye attachment. Ensure anchor assembly size is adequate for site conditions. Provide rods constructed of hot-dipped galvanized steel sized according to the soil bearing conditions in the area. Provide tripleye guy attachments constructed of hot-dipped galvanized steel. Anchor assemblies with double-strand eyes may be used in lieu of those with the tripleye feature when only one guy cable is to be attached. Ensure anchor assemblies are 7 feet minimum in length.

For type of anchor assembly furnished, ensure the following:

(A) **Expanding anchor** - provide steel construction with protective paint or heat shrink of 6 mil plastic to protect metal during shipping and storage.

(B) **Screw anchor** - provide hot-dipped galvanized steel construction.

(C) **Expanding rock anchors** - provide malleable iron and rust-resisting paint construction.

Provide 3-bolt clamp fabricated from galvanized steel with minimum length of 5 3/4". Ensure clamp has parallel grooves (one on each side of bolt holes) for cable placement. Provide three 1/2" diameter galvanized bolts and nuts to tighten the clamp around the messenger cable. Ensure clamp fits 1/4" to 3/8" messenger cable.

Provide full round guy cable guards that are 8 feet in length and constructed of ultraviolet stabilized, high impact, bright yellow, high density polyethylene.

Provide guy cables consisting of messenger cable of the same size as the largest sized messenger cable to be guyed. Comply with Article 1098-3 Messenger Cable.

1098-8 INDUCTIVE DETECTION LOOPS

(A) Loop Sealant

Provide loop slot sealant that completely encapsulates loop wire when installed according to manufacturer's instructions. Provide loop sealant that does not generate temperatures greater than 220 degrees F. Ensure sealant bonds with asphalt and concrete pavement saw slots so sealant and encapsulated loop wire do not come out of slot. Ensure sealant is self-leveling, but with sufficient viscosity to prevent exit from saw slot when installed along a ten percent grade.

Provide sealant that protects loop wire by preventing the entrance of dirt, water, rocks, sticks, and other debris into saw slot, and is resistant to traffic, water, gasoline, chemical and chemical fumes, mild alkalis, oils, and mild acids. Ensure sealant will

not be affected by water and sealant does not chemically interact with pavement and loop wire insulation.

Ensure loop sealant has sufficient flexibility to permit expected pavement expansion and contraction due to weather and to permit pavement movement due to traffic without cracking for a temperature range of -40 to 160 degrees F.

Provide sealant with a usable life of at least ten minutes once mixed, when the ambient temperature is 75 degrees F. Ensure sealant dries to tack free state in less than two hours, and does not flow within or out of saw slot after exposed surface has become tack free. Tack free time will be determined by testing with a cotton ball until no sealant adheres to cotton ball and no cotton adheres to sealant.

Ensure two part sealant cures within 48 hours to attain 95 percent of published properties for the cured material.

Ensure one part sealant cures within 30 days to attain 95 percent of published properties for the cured material.

(B) Loop Wire

Provide loop wire composed of 19-strand conductor insulated by a cross-linked polyethylene compound. Ensure insulated conductors are completely encased in tubes of low density polyethylene compound. Print manufacturer's name, manufacture year, and any applicable part number on encasing tube at intervals of 2 feet or less.

Provide number 14 AWG copper conductors fabricated from 19 strands that comply with ASTM B 3 before insulating. Ensure stranded conductors use either concentric or bunch stranding, and comply with circular mil area and physical requirements of ASTM B 8 or ASTM B 174 for bunch stranding.

Provide insulating compound that is cross-linked thermosetting black polyethylene (ASTM D 2655). Ensure insulation is applied concentrically about conductor. Provide insulation thickness not less than 0.026" at any point and minimum average thickness of 0.030" as measured by UL Standard 62.

Ensure insulation of finished conductor will withstand application of a 60 Hertz or 3000 Hertz, 7500 volt (RMS) essentially sinusoidal spark test potential as specified in UL Standard 83.

Provide insulated conductors that are factory-installed in protective encasing tube that comply with the following:

Encasing tube fabricated of polyethylene compound conforming to ASTM D 1248 for Type I, Class C, Grade E5.

Minimum inside diameter of 0.150"
Wall thickness of 0.040" $\pm$ 0.010"
Outside diameter of 0.240" $\pm$ 0.010"

(C) Conduit

Comply with Article 1098-4 for non-metallic conduit.

1098-9 LOOP LEAD-IN CABLE

Furnish lead-in cable with conductors of number 18 AWG fabricated from stranded copper that complies with IMSA Specification 50-2 except as follows:

Provide two pair (4 conductor) insulation pair colors: clear-brown and blue-pink.

Provide four pair (8 conductor) insulation pair colors: clear-brown, blue-pink, clear with black stripe tracer-brown with black stripe tracer, and blue with black stripe tracer-pink with black stripe tracer. Apply continuous stripe tracer on conductor insulation with longitudinal or spiral pattern.

Ensure one spirally-wrapped Aluminum Mylar tape is applied with aluminum side out to completely cover conductor assembly.

Provide cable jacket formed from black polyethylene. Ensure finished jacket provides environmental stress resistance, outdoor weatherability, toughness, low temperature performance, and ultraviolet resistance.

Provide a ripcord to allow cable jacket to be opened without using a cutter.

Provide length markings in sequential feet and within one percent of actual cable length. Ensure character height of the markings is approximately 0.10".

1098-10 FIBER-OPTIC CABLE

(A) SMFO Communications Cable

Furnish loose tube fiber-optic cable with required fiber count that complies with RUS CFR 1755.900, single mode with dielectric central member. Use single mode fiber in cable that does not exceed attenuation of 0.25 dB/km at 1550 nm and 0.35 dB/km at 1310 nm. Provide cable with all fibers that are useable and with surface sufficiently free of imperfections and inclusions to meet optical, mechanical, and environmental requirements. Provide cable with minimum of one ripcord under sheath for easy sheath removal and with shipping, storage, installation, and operating temperature of at least -40 to 160 degrees F with a dual layered, UV cured acrylate fiber coating applied by cable manufacturer that may be stripped mechanically or chemically without damaging fiber.

Provide fibers inside loose buffer tube. Use doped silica core surrounded by concentric silica cladding for each fiber. Distinguish each fiber and buffer tube from others by means of color coding that meets EIA/TIA-598 *Color Coding of Fiber-Optic Cables*. In buffer tubes containing multiple fibers, ensure colors are stable during temperature cycling and not subject to fading, sticking, or smearing into each other or into gel filling material. Use fillers in cable core if necessary to provide a symmetrical cross-section of cable. Fill buffer tubes with non-hygroscopic, non-nutritive to fungus, electrically non-conductive, homogenous gel. Ensure gel is free from dirt and foreign matter, and is removable with conventional nontoxic solvents.

Provide a central member consisting of a dielectric glass reinforced plastic rod. Apply binders with sufficient tension to secure buffer tubes and binders to the central member without crushing buffer tubes. Ensure that binders are non-hygroscopic, non-wicking (or rendered so by the flooding compound), and dielectric with low shrinkage.

Provide cable that has cable core interstices filled with super-absorbent, water-blocking compound that is non-conductive and homogenous. Ensure compound is free from dirt and foreign matter, and is removable with conventional nontoxic solvents.

Provide cable with high tensile strength aramid yarns or fiberglass yarns that are helically stranded evenly around cable core.

Provide cable jacket of consistent thickness that is free of holes, splits, and blisters, and contains no metal elements. Provide outer jacket of medium density polyethylene with minimum nominal sheath thickness of 0.050 inch. Ensure polyethylene contains carbon black for ultraviolet light protection and does not promote fungus growth.

Provide length markings in sequential feet and within one percent of actual cable length. Ensure character height of the markings is approximately 0.10".

(B) Drop Cable

Furnish drop cable assemblies to provide communications links between splice enclosures and transceivers through interconnect centers. Furnish drop cable assemblies containing a minimum of six individual fibers.

Furnish drop cable assemblies that comply with RUS-CFR 1755.900. Ensure drop cable assemblies have the same operating characteristics as the SMFO cable it is to be coupled with.

On one end of cable assemblies, furnish six ST-PC connectors for termination on connector panel in equipment cabinet. Provide either factory assembled drop cables with ST-PC connectors or field installed connectors.

Ensure attenuation of drop cable at 1310 nm does not exceed 0.5 dB/km. Ensure attenuation loss for complete drop cable assembly does not exceed a mean value of 1.5 dB.

Provide length markings in sequential feet and within one percent of actual cable length. Ensure character height of markings is approximately 0.10".

(C) Communications Cable Identification Markers

Furnish yellow communications cable identification markers that are resistant to fading when exposed to UV sources and changes in weather. Use markers designed to coil around fiber-optic cable that do not slide or move along the surface of the cable once installed. Ensure exposure to UV light and weather does not affect the markers natural coiling effect or deteriorate performance. Provide communications cable wraps that permit writing with an indelible marking pen and contain the following text in black:

WARNING
NCDOT FIBER OPTIC CABLE
CONTACT TELEPHONE NUMBER: _____
WARNING
NCDOT FIBER OPTIC CABLE

Overall Marker Dimensions: 7"(l) x 4"(w)
Lettering Height: 3/8 inch for *WARNING,* 1/4" for all other lettering

Submit a sample of proposed communications cable identification markers to the Engineer for approval before installation.

(D) Fiber-Optic Cable Storage Guides

Furnish fiber-optic storage guides (snowshoes) that are non-conductive and resistant to fading when exposed to UV sources and changes in weather. Ensure snowshoes have a captive design such that fiber-optic cable will be supported when installed in the rack and the minimum bending radius will not be violated. Provide stainless steel attachment hardware for securing snowshoes to messenger cable and black UV resistant tie-wraps for securing fiber-optic cable to snowshoe. Ensure snowshoes are stackable so that multiple cable configurations are possible.

1098-11 FIBER-OPTIC SPLICE CENTERS

(A) Interconnect Center

Furnish compact, modular interconnect centers designed to mount inside equipment cabinets. Design and size interconnect centers to accommodate all fibers entering cabinets.

Provide splice trays that hold, protect, and organize optical fibers, and secure fibers inside splice tray. Design and size splice trays to be dielectric, to accommodate all fibers entering splice tray, and to provide sufficient space to prevent microbending of optical fibers. Provide connector panels with ST-type connectors.

Furnish SMFO pigtails with each interconnect center. Provide pigtails containing connector panels that are a maximum of 6 feet in length with a factory assembled PC-ST connector on one end. Ensure SMFO pigtails meet the operating characteristics of the SMFO cable with which it is to be coupled.

Furnish SMFO jumpers that are a minimum of 3 feet in length with factory assembled PC-ST connectors on each end. Ensure SMFO jumpers meet the operating characteristics of the SMFO cable with which it is to be coupled.

(B) Splice Enclosure

Furnish splice enclosures that are re-enterable using a mechanical dome-to-base seal with a flash test valve, and are impervious to the entry of foreign material (water, dust, etc.). Ensure enclosures are manufactured in such a manner to be suitable for aerial, pedestal, buried, junction box, and manhole installation.

Provide enclosures with a minimum of one over-sized oval port that will accept two cables and with a minimum of four round ports (for single cables) that will accommodate all cables entering enclosure. Provide heat shrink cable shields with enclosure to ensure weather tight seal where each cable enters enclosure.

Within enclosures, provide enough hinged mountable splice trays to store the number of splices required, plus the capacity to house six additional splices. Provide a fiber containment basket for storage of loose buffer tubes expressed through the enclosure. Ensure enclosures allow sufficient space to prevent microbending of buffer tubes when coiled.

Provide splice trays that hold, protect, and organize optical fibers, and secure fibers inside splice tray. Provide splice trays that are dielectric.

1098-12 FIBER-OPTIC TRANSCEIVERS

Furnish shelf-mounted, modular, single mode fiber-optic transceivers that transmit and receive optical signals over a fiber-optic communications medium of two fibers and interface with equipment cabinets (signal controller, dynamic message signs, etc.). Ensure transceivers are asynchronous in operation. Ensure transceivers are capable of operating up to 5 miles without boosting signal and without distortion. Ensure transceivers are switch selectable for either local or master operation.

Do not provide transceivers internal to system equipment. Provide identical transceivers at all locations capable of being interchanged throughout system.

Provide LEDs on the front panel of transceivers for power, and transmitting and receiving indications. Comply with the following:

Input Power:	115 VAC
Minimum Loss Budget:	12 dB with corresponding receiver
Operating Wavelength:	1310 or 1550 nm
Optical Connector:	ST
Signal Connector:	Female Plug Type
Temperature Range:	0 to 150 degrees F

Ensure modems operate in one of the following topologies:

Drop and Repeat Transceivers: Furnish transceivers that transmit and receive data in drop-and-repeat poll-response data network mode with EIA/TIA-232, EIA/TIA-422, and EIA/TIA-485 protocols.

Self-Healing Ring Transceivers: Furnish transceivers that transmit and receive data in a drop-and-insert poll-response data network mode with EIA/TIA-232, EIA/TIA-422, and EIA/TIA-485 protocols. Ensure transceiver operates in a Self-Healing Ring Network Architecture.

1098-13 DELINEATOR MARKERS

Furnish tubular delineator markers, approximately 6 feet long, and constructed of Type III, high density polyethylene material. Provide delineator assemblies that are ultraviolet stabilized to help prevent components from color fading, warping, absorbing water, and deterioration with prolonged exposure to the elements. Provide delineators

designed to self-erect after being knocked down or pushed over. Provide orange delineator posts.

Provide text, including division contact number, hot stamped in black on a yellow reflective background material that will not fade or deteriorate over time. Provide delineator markers with nominal message height of 15" that contain the following text visible from all directions approaching the assembly:

WARNING	FIBER OPTIC CABLES
BEFORE EXCAVATING OR IN AN EMERGENCY CALL (___) ___-____	
NORTH CAROLINA DEPARTMENT OF TRANSPORTATION	

1098-14 PEDESTALS

Provide aluminum pedestals with foundations that conform to AASHTO. Furnish Class B minimum concrete that conforms to the applicable parts of Section 1000 Portland Cement Concrete Production and Delivery.

Provide reinforcing steel that conforms to the applicable parts of Section 1070 Reinforcing Steel.

Provide caps and bases as part of pedestal assemblies. Unless otherwise required, furnish pedestals that provide the following heights:

To support traffic signal equipment cabinets – 30" above foundation.

To support signal heads, see Section 1705 for required signal head height.

Provide pedestal caps fabricated from cast aluminum that meets Aluminum Association Alloy 356.0F. Provide stainless steel set screws as fasteners.

Provide either shoe-type or transformer-type pedestal bases made of aluminum that meets Aluminum Association Alloy 356.0 or equivalent, and designed to break upon impact in accordance with AASHTO requirements. For shoe-type bases, provide aluminum flange plate with four anchor boltholes, a hole to match the shaft, and a 4 x 8" hand hole with a reinforced frame located 8" above base. For transformer-type bases, provide overall dimensions of 15"(l) x 13"(w) x 13"(d) and an 8" x 8" hand hole with removable cover.

Ensure bases are continuously welded to shafts or threaded to receive shafts. For use in grounding, provide a 1/2" minimum diameter, coarse thread stud located inside base at the handhold and oriented for easy access.

For each pedestal, provide four bolts with outside diameter of 3/4" and length of 18" each with leveling nut and washer. Ensure anchor bolts are hot-dipped galvanized in accordance with ASTM A 153 with completely galvanized nuts and washers.

1098-15 SIGNAL CABINET FOUNDATIONS

Provide foundations with a minimum pad area that extends 24" from front and back of cabinet and 3" from sides of cabinet.

Furnish cabinet foundations with chamfered top edges. Provide minimum Class B concrete.

Provide preformed cabinet pad foundations with 7"(l) x 18"(w) minimum opening for the entrance of conduits. Ensure that no more than four 3/4" holes are cast or drilled in each pad.

1098-16 CABINET BASE ADAPTER/EXTENDER

Fabricate base adapters and extenders from the same materials and with the same finish as cabinet housing. Fabricate base adapter and extender in the same manner as controller cabinets, meeting all applicable specifications called for in Section 7.5 of CALTRANS TEES (11/19/99). Provide base adapters and extenders a minimum height of 12".

1098-17 BEACON CONTROLLER ASSEMBLIES

(A) General

Furnish all cabinets with a solid state flasher that meets NEMA TS-2-1998. Encapsulate flasher components as necessary. Connect flasher to provide beacon operation as specified.

Submit drawings showing dimensions, location of required equipment and mechanisms, cabinet electrical diagrams, part numbers and descriptions of required equipment and accessories to the Engineer. Provide certification to the Engineer that materials used in cabinet construction meets these Specifications.

Furnish unpainted, natural, aluminum cabinet shells that comply with Section 7 of NEMA TS-2-1998. Ensure all non-aluminum hardware on cabinet is stainless steel or Department approved non-corrosive alternate. Provide roof with slope from front to back at a minimum ratio of 1" drop per 2 feet. Ensure each exterior cabinet plane surface is constructed of a single sheet of seamless aluminum. Ensure all components are arranged for easy access during servicing. When modular in construction, provide guides and positive connection devices to ensure proper pin alignment and connection.

Connect metal oxide varister, type V150LA20, between each field terminal and ground bus.

Provide beacon controller assemblies equipped with terminal blocks (strips) for termination of all field conductors and all internal wires and harness conductors. Terminate all wires at terminals. Ensure all field terminals are readily accessible without removing equipment and located conveniently to wires, cables, and

harnesses to be connected. Ensure terminals are not located on under side of shelves or at other places where they are not readily visible or where they may present a hazard to personnel who might inadvertently touch them. Provide terminal blocks made of electrical grade thermoplastic or thermosetting plastic. Ensure each terminal block is of closed back design and has recessed-screw terminals with molded barriers between terminals. Ensure each terminal consists of two terminal screws with removable shorting bar between them. Ensure each terminal block is labeled with a block designation and each terminal is labeled with a number. Ensure all terminal functions are labeled on terminal blocks. Provide labels that are visible when terminal block is fully wired. Show labels on cabinet wiring diagrams. Ensure terminals serving similar functions are grouped together.

Connect each conductor, including unused conductors, within or entering cabinet to a terminal using crimped spade lugs. Place no more than two conductors on any single terminal screw. Terminations to back panel may be soldered. Do not use quick connectors or barrel connectors. Make all connections at terminals. Do not make in-line splices.

Ensure outgoing circuits have same polarity as line side of power supply. Ensure common return has same polarity as grounded conductor (neutral) of power supply.

Neatly package all wiring. Dress harnesses by lacing, braiding, or tying with nylon tie wraps at closely spaced intervals. Attach wires, cables, or harnesses to cabinet walls for support or to prevent undue wear or flexing. Use nylon tie straps or metal clamps with rubber or neoprene insulators. Screw these attachment devices to cabinet. Do not use stick-on clamps or straps.

Tag AC+, AC-, chassis ground, and flasher circuit conductors with non-fading, permanent sleeve labels at conductor ends at terminals or use color-coded wire. Ensure sleeve labels tightly grip conductors. Alternatively, use hot stamped labels on internal conductor insulation at intervals of no greater than 4". Ensure label legends are permanent.

Ensure all jumpers are wire conductors or metal plates. Do not use printed circuit back panels or back panels using wire tracks as jumpers.

Lay out all equipment and components for ease of use and servicing. Ensure equipment controls can be viewed and operated without moving or removing any equipment. Ensure there is access to equipment or components for servicing without removing any other equipment or components. Removal of equipment is acceptable to access fan or thermostat. Ensure equipment can be removed using only simple hand tools. Ensure layout of equipment and terminals within the various cabinets furnished is identical from cabinet to cabinet, unless otherwise approved.

Mount equipment using harnesses with suitable multipin (or similar) connectors. Design or key all equipment to make it physically impossible to connect unit to wrong connector. Ensure that functionally equivalent equipment is electrically and mechanically interchangeable.

Equip vents with standard-size, replaceable filters or, if located where they can easily be cleaned, permanent filters.

(B) Type F1 Cabinet

Provide dual-circuit flasher and 20-amp circuit breaker. Install one insect-resistant vent on bottom and one on top on opposite wall in order to facilitate airflow.

(C) Type F2 Cabinet

Provide 20" high x 16" wide x 12" deep cabinet, dual-circuit flasher, 20-amp circuit breaker, and solid state time switch. Provide filtered power to time switch. Install one insect-resistant vent on each side of cabinet at the bottom in order to facilitate airflow.

(D) Type F2 and F3 Cabinet – Surge Protection and Documentation

Furnish and install a power line surge protector in the service power. Provide a two-stage power line surge protector that allows connection of the radio frequency interference filter between stages of the device. Ensure device has a maximum continuous current rating of at least 10A at 120 V. Ensure device can withstand a minimum of 20 peak surge current occurrences at 20,000A for an 8x20 microsecond waveform. Provide maximum clamp voltage of 280V at 20,000A with a nominal series inductance of 200µh. Ensure voltage does not exceed 280V. Provide devices that comply with the following:

Frequency (Hz)	Minimum Insertion Loss (dB)
60	0
10,000	30
50,000	55
100,000	50
500,000	50
2,000,000	60
5,000,000	40
10,000,000	20
20,000,000	25

Install surge protector in circuit breaker enclosure in a manner that will permit easy servicing. Ground and electrically bond surge protector to cabinet within 2" of surge protector.

Furnish and install a suitably sized plastic envelope or container in cabinet for holding cabinet wiring diagrams and equipment manuals. Locate envelope or container so it is convenient for service personnel. Furnish 2 sets of non-fading cabinet wiring diagrams in a paper envelope or container and place them in the plastic envelope or container.

(E) Type F3 Cabinet

Provide 25" high x 22" wide x 15" deep] cabinet, dual-circuit flasher, fan and thermostat, and cabinet light.

Install a vent or vents at or near the cabinet bottom to permit the intake of air sized for the rated flow of air from the fan, but no smaller than 20 in^2.

Equip cabinet with two NEMA standard circuit breakers (20A & 15A) installed to ensure personnel servicing the cabinet, including rear of back panel, cannot inadvertently be exposed to a hazard. Install a terminal block that will accommodate service wire as large as number 4 AWG, and connect it to the circuit breaker. Install circuit breakers in addition to any fuses that are a part of the individual control equipment components. Wire cabinet light and thermostatically-controlled fan to the 15A circuit breaker.

Ensure cabinet has sufficient electrical and electronic noise suppression to enable all equipment in it to function properly. In addition, equip cabinet with a radio interference filter connected between stages of the power line surge protector. Ensure filter minimizes interference generated in the cabinet in both broadcast and aircraft frequencies. Use filter that provides attenuation of at least 50 decibels over a frequency range of 200 kilohertz to 75 megahertz. Ensure filter is hermetically sealed in an insulated metal or plastic case. Provide filter designed to operate in a 120-volt, 60 Hertz, single-phase circuit with currents of 15 amperes or more, such as HESCO LF35, or equivalent.

Provide filtered power to detector panel.