TABLE OF CONTENTS
PART IV

SECTION NO. **PAGE**

4.00 CONSTRUCTION INSPECTION 1

4.01 CLEARING AND GRUBBING 1
4.01.01 GENERAL 1
4.01.02 CHECK LIST FOR CLEARING AND GRUBBING 2

4.02 GRADING - EXCAVATION AND EMBANKMENT 2
4.02.01 GENERAL 2
4.02.02 EMBANKMENTS 4
4.02.03 GRADE POINTS 5
4.02.04 COMPACTION AT STRUCTURES 5
4.02.05 ROCK EMBANKMENTS 6
4.02.06 SURPLUS MATERIAL 6
4.02.07 MOISTURE CONTROL 6
4.02.08 PRE-WATERING 7
4.02.09 EXCAVATION 7
4.02.10 ROCK EXCAVATION 8
4.02.11 CLASSIFICATION 9
4.02.12 FINISH GRADING 9
4.02.13 GRADING RECORDS 10
4.02.14 CHECK LIST FOR GRADING 11

4.03 STRUCTURES 12
4.03.01 GENERAL 12
4.03.02 LOCATION 12
4.03.03 INSPECTION 13
4.03.04 SAFETY 14
4.03.05 EXCAVATION 14
4.03.06 COFFERDAMS 15
4.03.07 CULVERT FOUNDATION 17
4.03.08 BEARING PILES 17
4.03.09 DRILLED SHAFTS 23
4.03.10 SUPERSTRUCTURES 24
4.03.11 BRIDGE DECK WEARING SURFACE 25

4.04 PORTLAND CEMENT CONCRETE PAVEMENT 26
4.04.01 GENERAL 26
4.04.02 CONCRETE PAVEMENT METHODS 26
4.04.03 ORGANIZATION OF PORTLAND CEMENT CONCRETE PAVEMENT PROJECT 26
4.04.04 DUTIES AND RESPONSIBILITIES OF THE PROJECT ENGINEER OR PROJECT MANAGER 27
4.04.05 DUTIES AND RESPONSIBILITIES OF THE SURVEY PARTY CHIEF 27
4.04.06 DUTIES AND RESPONSIBILITIES OF THE CONCRETE PLANT INSPECTOR 28
4.04.07 DUTIES AND RESPONSIBILITIES OF THE SLAB INSPECTOR 33
4.04.08 CORING PORTLAND CEMENT CONCRETE PAVEMENT OR BASE COURSE 51

TABLE OF CONTENTS
PART IV (Continued)

SECTION NO. PAGE

4.05 BITUMINOUS SURFACE 52
4.05.01 GENERAL 52
4.05.02 MATERIALS 52
4.05.03 DESIGN 52
4.05.04 PRE-CONSTRUCTION CONFERENCES 53
4.05.05 CONVENTIONAL SEALING 54
4.05.06 BITUMINOUS PRIME COAT 62
4.05.07 SLURRY SEALING 63
4.05.08 MODIFIED SLURRY SEAL 68
4.05.09 COLD RECYCLED BITUMINOUS CONSTRUCTION 69

4.06 BASE COURSES AND SUB-BASES 72
4.06.01 GENERAL 72
4.06.02 EQUIPMENT 72
4.06.03 MATERIALS 72
4.06.04 SUBGRADE PREPARATION 73
4.06.05 PRODUCTION AND DELIVERY OF MATERIAL 73
4.06.06 ROAD MIXING METHODS 73
4.06.07 TRAVELING PLANT MIX METHODS 75
4.06.08 CENTRAL PLANT MIX METHODS 76
4.06.09 AERATION 76
4.06.10 LAYING AND COMPACTING 76
4.06.11 CURING AND MAINTENANCE 77
4.06.12 SHOULDERS, ENTRANCES AND SIDEROADS 77

4.07 LIGHT TYPE SURFACING 78
4.07.01 GENERAL 78
4.07.02 EQUIPMENT 78
4.07.03 CONSTRUCTION PROCEDURES 78

4.08 ROADSIDE IMPROVEMENT 78
4.08.01 GENERAL 78
4.08.02 DELIVERY OF PLANT MATERIALS 78
4.08.03 WORK PREPARATORY TO PLANTING 79
4.08.04 PLANTING TREES, SHRUBS AND VINES 79
4.08.05 PLANTING SODS AND SEEDS 80
4.08.06 MULCH 80
4.08.07 PARK STRUCTURES 81
4.08.08 ACCEPTING MATERIALS 81

INDEX TO FIGURES

FIGURE NO. PAGE
FIGURE IV-1 MEASUREMENTS FOR CHECKING UNIFORM PAVEMENT 34
FIGURE IV-2 METHOD OF SQUARING BASKETS 38
FIGURE IV-3 PAVEMENT STATIONING 48
FIGURE IV-4 BITUMINOUS SEALING DESIGN 56
FIGURE IV-5 ASPHALT DISTRIBUTOR DATA 61

PART IV

4.00 CONSTRUCTION INSPECTION

The addition of QC/QA to KDOT construction projects, does not in any way relieve the responsibility of KDOT personnel from inspecting work on the construction projects.

4.01 CLEARING AND GRUBBING

4.01.01 GENERAL

The limits of clearing and grubbing areas are to be staked or marked, unless otherwise satisfactorily delineated. Usually, the slope stakes are the outside limits of any clearing. Dead and dying trees occurring on the right of way, outside of the specified limits for clearing, should be removed to improve the appearance of the finished project.

The Inspector and the Contractor's Superintendent should field check the project before any work is done. The field check should point out all areas where grass and trees are to be preserved and to determine the locations of grubbing.

In the interest of beautification of highways, suitable trees, shrubs and ground cover within the right-of-way, but situated outside the limits of construction operations that could enhance beauty and break the uniformity of the conventional lines of clearing, should be preserved. Any trees or shrubs within the right-of-way that are designated to be preserved for shade or road beautification are to be identified and marked by the Engineer. Such marking may consist of attaching to the tree, where readily visible, a suitable placard or tag bearing the words "SPARE THIS TREE". The Contractor will be required to replace or repair any damage done to trees or shrubs designated to remain if damage is due to his negligence.

The trees that are to be saved should be checked to determine if their locations would be considered a safety hazard in accordance with the latest safety standards. The Inspector should become acquainted with the safety standards to make this determination.

The Contractor may employ a variety of methods to affect the clearing and grubbing of the project, although the use of bulldozers and power saws are among the most common. At locations where the embankment will be 3 feet or less in height, all trees and stumps will be grubbed. At locations where the embankment will exceed 3 feet in height, the trees and stumps need not be grubbed if cut off within 6 inches of the ground.

The method of disposal of all material shall be approved by the Engineer. All methods of disposal shall be accomplished in accordance with all applicable Federal, State and Local ordinances.

When burning of the debris resulting from clearing and grubbing is permitted, it is the Contractor's responsibility to burn the debris at such locations and to control the burning in such manner as is necessary to preclude any damage to property or injury to trees that are to be preserved. Burning sites on the roadway are to be selected on the clearing and grubbing areas where the fire can be kept under control and trees are sufficiently away to be protected from injury by the heat. Contractors must exercise caution to prevent damage to private property during clearing and grubbing operations.

It should be determined that the clearing and grubbing has been satisfactorily completed before permitting grading operations in a given area to start. Generally, grubbing of all large roots and stumps is performed wherever clearing is required, except that grubbing is not required under embankments of 3 feet or more in height.

4.01.02 CHECK LIST FOR CLEARING AND GRUBBING

a. Has Contractor obtained written permission from property owners for use of their property for disposal of materials and debris?

b. Has the Survey Crew arranged to save, relocate or reference all important land monuments, survey points, bench marks, etc.?

c. Has the Contractor been thoroughly informed about all trees, shrubs and bushes that are to be protected and spared?

d. Have all property owners been notified of construction that will affect them?

e. Have the limits of construction and clearing been properly set?

f. Has the Contractor made proper arrangements to dispose of trees and other waste material?

g. Are all Standard Specifications, Special Provisions, agreements, and Plan drawings and notes thoroughly understood?

h. Are all identification signs and posters that are required erected in a conspicuous location?

i. Observe that adequate traffic control devices are used in conformance with the traffic control plan.

j. Is the Contractor promptly refilling all holes left by the clearing and grubbing, removal of structures, or any other operation that makes water pockets?

k. Is Contractor's operation damaging any roads, private property, etc.?

l. Is the Contractor applying good legal relations and responsibility to the public?

m. Has the clearing and grubbing been approved for an area, prior to building embankment?

4.02 GRADING - EXCAVATION AND EMBANKMENT

4.02.01 GENERAL

The Construction Engineer, Project Manager, Surveyor and Inspector should be thoroughly familiar with the Plans, Standard Specifications, Special Provisions, right of way agreements and environmental requirements that concern the work. The Plans should be carefully examined and checked prior to starting the work, and all notes on the Plans should be checked against physical features on the project. All of these items should be discussed and understood by all before the project work begins.

After a thorough study of the preceding items, the Project Manager and Inspectors should go over the unusual, difficult or special items with the Contractor's representative on the job. A special effort must be taken to point out the locations of all utilities and especially the buried utilities.

Typical items that should be checked by the Inspector prior to the beginning of grading operations are:

- Any archeological evidence. Insure archeological clearance has been obtained on all contractor furnished borrow.
- Items covered by an environmental packet such as unusual wildlife habitats, restrictions on timing of construction activities and water pollution controls. This includes checking the Contractor's temporary and permanent water pollution control plan.
- Any fences that must be moved or rebuilt to contain livestock. This includes temporary fences.

- Adequate right of way marking to show Contractor limits of his operation. Has the Surveyor staked the project in accordance with Part III, right of way, easements, bench marks, slope stakes, etc?
- Adequate marking for borrow or construction easements.
- Adequate clearance of utility poles from construction limits.
- Adequate marking for buried utilities as to location. Check to determine if clear of damage from normal Contractor's operation, and has Dig Safe been notified.
- Section corners, survey or other type of permanent markers should be checked for reference for future replacement, relocated or marked.
- Project soil survey file complete. Prior to starting work, the Inspector should obtain soil samples of the various soils as reported in the project soil survey files. These soil samples should be placed in jars at the normal moisture content and properly identified by the number as shown in the soil survey. These samples will facilitate the identification of the soils during grading operations.
- Obtain all equipment and books required to carry out the functions of an inspector which are: Inspection and control of grading operations, sampling and testing for moisture and density, including proper soils identification, keeping records of the work and progress, and finally the making of complete reports covering all events that are pertinent to the project.
- If contractor construction staking is a part of the contract, the staker may be required to take additional measurements and cross sections prior to work, and will provide field books to the KDOT at the end of the project. Schedule a meeting with the prime Contractor, the surveyor and the KDOT, prior to beginning staking operations, to insure that staking methods are understood, and that they comply with acceptable practices.

The Inspector responsible for inspecting the grading operations should become familiar with the staking procedures that will be used on the project. He should also work closely with the survey crew so that all necessary field measurements may be made with a minimum of inconvenience to all concerned, remembering that earthwork is measured by average end area and not load count or other means. He should have a thorough understanding of the limits of the balance points as well as the cross-sections. He should be familiar with the planned drainage and all material sources. He should know the bounds of the right-of-way and borrow sites as well as any conditions imposed by the deeds or agreements.

Before start of the grading operations, the Inspector should review the project for special features relative to grading. He should observe the drainage of the adjacent lands and determine that required intercepting embankments and flumes have been staked at their proper locations to permit their construction during the proper sequence of the grading operations. He should be familiar with the Contractor's schedule for installing temporary project water pollution control devices.

Preparing the roadway foundation includes the removal of objectionable material from cut and fill sections, and the work required to provide a satisfactory foundation treatment 6 inch scarified for embankments. Before excavation is started, it should be determined that the clearing and grubbing has been satisfactorily completed on the area to be excavated and on the area to support the embankment. Where excavated materials are to be used in roadway embankments, it is desirous that heavy sod and other unstable soils should first be removed from the area to be excavated and disposed of outside of the roadbed foundation.

In order to provide the traveling public the opportunity to use new facilities, they must be completed as soon as current construction methods permit. It is often necessary to place surfacing on embankments that have been completed during the same construction season. Rigid control of embankment compaction is therefore a necessity recognized by all road building agencies. Due to accelerated rates of construction, it is increasingly important that the Inspector keep a continual visual inspection of these operations.

As soon as possible, the Project Manager should reconcile preliminary quantity calculations and shrinkage and swell factors with actual quantities and factors. Deviations may require wasting, adjustments in haul, or adjustments in grade or alignment.

It is the intent of the Standard Specifications that the graded roadway, in respect to the finished grade and section, will conform closely to the plan requirements. Prior authorization is required to excavate areas of the right of way outside of the roadway grading limits; unless permitted by the Contract Documents, or to change the grade of the roadway to balance quantities of excavation or for other justifiable purposes. Minor adjustments of slopes may be made as required to meet existing conditions or to provide an improvement in general appearance.

4.02.02 EMBANKMENTS

Embankments should be constructed and maintained in such condition that in the event of rain, the work will be well drained at all times. If rain appears imminent, the embankment can be rolled and tight bladed with a motor grader to seal the surface and deter the absorption of water. Water should be drained away by temporary drainage facilities. In loam and clay soils, the problem of stability and density are compounded when the moisture of the soil is above optimum. Keeping the grade smooth and slightly higher in the center for quick runoff of rain water and maintaining ditches open for free drainage will help to prevent saturated subgrades.

After a heavy rain or after setting through the winter season, the soil may have to be manipulated to dry and stabilize it, and then recompacted, prior to beginning normal grading operations.

When tests are not used as a basis for determining the acceptability of earthwork compaction, the Inspector must use experience and judgment to determine when satisfactory compaction has been obtained. If the Standard Specifications require that certain equipment be used, it must be inspected and approved prior to its use. This information is to be made a part of the project records. Particular attention should be given toward maintaining proper loose layer thickness, proper moisture content and adequate coverage with the specified rollers. If the specified roller is suitable for the materials being used and is of the proper weight, embankments constructed in relatively thin layers at optimum moisture content will normally possess the required stability, and neither settlement nor swellage due to improper consolidation will be a serious problem.

When the moisture of the embankment material is at or near the optimum, the Contractor should have little difficulty in obtaining satisfactory density, if adequate compactive effort is being applied. With modern, heavy earthmoving equipment, compaction is often attained by the hauling units alone, if the spread covers a large area, the material is placed in thin layers, and the units break track for maximum compactive coverage. A common problem occurs when many units are hauling a short distance to a small embankment area. Either supplemental compaction and/or blading equipment must be added or the number of hauling units reduced to attain a balanced operation. The Inspector should have an understanding with the roller operators and

the Contractor's Foreman of a suitable rolling and dumping pattern. This pattern must be discussed regularly with the personnel involved to obtain uniform and complete coverage of the fill areas. It is required on earth fills that a motor grader be operated continuously while embankment is being placed. This grading work must be done with the rolling operations to prepare the grade for proper rolling characteristics.

Whenever the density tests indicate that the Contractor has not obtained specified density, he must be advised that the succeeding layer may not be placed until the Specification requirement is met. The decision as to what corrective work is to be done is left up to the Contractor. However, from the test results and from his observations, the Inspector should recognize the reason for the low density and may suggest appropriate action such as discing and drying wet soil, adding water to a dry soil, or simply doing more rolling if moisture is not a problem. For many types of soil, the top of the layer being compacted remains loose until it has been confined by placement of the succeeding layer. For that reason, it is important that the loose surface be scraped away before the density test is taken.

4.02.03 GRADE POINTS

Many times roughness in the base and surface courses of a roadbed appears at the junction of sizeable excavation and embankment sections. This is likely the result of a lack of attention to the importance of embankment foundation preparation in these critical areas. This situation is comparable to the junction of a side hill excavation and its laterally adjacent embankment. Under these conditions, "benches" are cut into the existing ground slope as each succeeding layer of embankment is placed. Benching shall be of sufficient width to permit operations of placing and compacting equipment. This bench area should be compacted with this layer of embankment, and then covered with the next lift of loose embankment material. As a result of the manipulation and compaction that follows, the embankment lift is "keyed" into the adjacent natural ground. This procedure, with the "benched" cut at an angle to the road centerline that parallels the ground slope, can be advantageous in reducing subsurface movement where these grade points occur.

4.02.04 COMPACTION AT STRUCTURES

When compacting embankments in the vicinity of structures, extreme care shall be exercised to prevent damage to the structures, due to contact with the roller. This is of particular importance at structure wing walls. Compaction is specified adjacent to structures, and it shall be performed as set out in the Contract Documents. The Inspector shall require that the lifts be placed, and the compaction accomplished on both sides to approximately the same elevation at the same time so as not to cause overturning of the structure. Structures are designed to withstand the lateral pressure of the compacted embankment with the possible exception of long wing walls. Particular care shall be exercised at these locations to see that all debris and soft, wet material is removed from the embankment foundation, that the embankment is started on stable soil if at all possible, and the compaction is obtained on each lift over the entire area and for the full depth of the embankment. A slight easing of this requirement may be necessary against wing walls to prevent overturning or cracking of the wing, but the exception should apply only for a slight distance back of the wing, and the degree of compaction should be lessened only enough to prevent tipping or cracking the wing. The Inspector shall require the use of mechanical tampers or hand tampers in accordance with the Standard Specifications to obtain compaction in areas inaccessible to rollers or other equipment.

4.02.05 ROCK EMBANKMENTS

Rock fills should be constructed to preclude or minimize future settlement. The rock should not be dumped in its final position, but should be deposited slightly aside and manipulated or otherwise shoved into position in such manner that the various sizes of rock are uniformly distributed, and all voids are filled with fine material.

The construction methods for placing embankment material consisting principally of rock will usually depend upon the size of the rocks and the amount of rock present. Ordinarily, rock embankments are constructed in layers extending over the full width of the roadway, with the layer thickness conforming to the requirements of the governing specifications. By exercising skill in handling, the coarse and fine materials can usually be distributed so that the interstices in the various size stones will be filled with small stones and earth to make the embankment as dense and compact as possible. The rock fill shall be shaped and constructed so that the fill will drain at all times. Allowing material to roll into place by dumping over the edge of completed work should not be permitted. Oversize rocks not suitable for placement in a layer should be broken down to the proper dimensions.

4.02.06 SURPLUS MATERIAL

Surplus material that is suitable for embankment should be used to flatten the fill slopes and fill low areas between embankment and right of way line, or in loops and gores of the interchange areas if such areas are available. The Project Manager should select disposal areas, where possible, which will not interfere with drainage, will benefit future development, and will improve the appearance and stability of the facility. If the quantity of surplus material is large, the low grade areas should be investigated for a possible grade raise. This is the most advantageous use of surplus suitable material.

Unsuitable material should be wasted as shown in the Plans, or if it is not shown on Plans, wasted as directed by the Project Manager. This material should not be used on the embankments except to flatten the slopes. It can also be used to fill low areas in the right-of-way with written permission of the adjacent property owner, which the Contractor must obtain. When the surplus or unsuitable material is disposed of in an area as outlined above, special consideration should be given by the Project Manager and Inspector to the drainage, both from the roadway and also from the adjacent property. A toe or slope ditch may be required to allow proper drainage from the roadway ditch or from the adjacent property as may be required.

4.02.07 MOISTURE CONTROL

The amount of water in a soil or soil mixture, shown as a percentage of the dry weight, is called the moisture content. Each soil or soil mixture compacts most easily, and to its highest density at some definite moisture content. This is called the optimum moisture content. A mixture of granular material and a sticky material, such as clay or silt, compacts most easily when the moisture content is within a narrow range. The range of moisture depends on the type of material and the method used to compact it. For very fine materials, such as silt or clay, the moisture content must be maintained close to the optimum to be fully compacted.

The Inspector should check the moisture content of the excavation and borrow material in advance of the Contractor's operations. He should discuss the Contractor's plan for controlling the moisture content. This will include the drying or moistening of the excavated material, depending on the natural moisture present. The Contractor will be better able to plan

his operations effectively if he knows the condition of the material to be excavated and whether it must be dried or moistened.

If the moisture content is too high, it must be reduced to the specified limit by some method of aerating. If the moisture content is too low, it must be increased to the specified limit by adding water. This may be done by sprinkling the material with water, using equipment specified in the Standard Specifications, as it is being placed in the embankment. It will be necessary to do some mixing by blading or discing to uniformly distribute the moisture in the soil before compaction.

4.02.08 PRE-WATERING

The moisture content in the soil may be increased by "pre-watering" the excavation areas by either ponding or sprinkler irrigation. The "pre-watering" method has been found to be quite satisfactory for most soils providing the proper inspection and control of the operation is provided. It is necessary and important to determine the approximate natural moisture content in the soil in the excavation or borrow areas, the approximate quantities of water required, and to control the quantities of water applied.

It is preferable to preserve the natural vegetation growth of each excavation area until the watering has been completed to reduce evaporation. If the vegetation is removed prior to watering, or the type, slope or condition of the soil warrants, the area should be ripped on the contour of the ground to a depth of 2 feet on approximately 4 feet centers to facilitate penetration of the water and to minimize runoff. Runoff should be avoided by adjusting the application rate and the construction of dikes.

Ponding or sprinkler irrigation in the excavation areas may require more water and more preliminary work than wetting the soil as it is placed in the embankment. However, the moisture will be more uniformly distributed, the moisture content is more easily controlled, and dust is practically eliminated. In the event the Contractor elects to pre-water the excavation areas, it is his responsibility and expense to obtain soil samples both prior to and during the water application. The Engineer will run moisture tests to determine water application rates and to check the progress of the penetration. The water application rate is determined using the natural moisture content and natural in-place dry density of the soil to be excavated.

The areas will require a curing period to permit the water to move downward and become uniform in the soils. This time will vary with soil types and condition of the soils. This determination will be made by the Project Manager using sample cores taken at intervals throughout the curing period.

4.02.09 EXCAVATION

The roadbed and ditches should be maintained in such a manner that the work will be well drained at all times. The ditch sections and roadway slopes shall be checked while being constructed to insure that the cross-section is according to plan and slope stakes. Check the drainage outlets before constructing the ditches to make sure of the direction of flow. Outlet ditches and channels should be excavated before starting other items of roadway excavation or drainage structures. This procedure very often prevents flooding of other operations, and the work can proceed more efficiently. Wherever it is practical and the excavated material is suitable, it should be used in the construction of the roadway.

Frequent inspections will be necessary during the excavation operations to determine that:

- the roadway, intersections, approaches, ditches and channels are excavated to the required grade, width and slope
- rock in the roadbed is properly subgraded
- proper disposal is made of any unsuitable material.

Unless the Contract Documents show the material to be wasted, all suitable excavated material shall be used in the construction of embankments. In order to utilize all desirable material, intersections and entrances should be graded at the time the roadway excavation is made.

Unstable material is material that would otherwise be suitable, but due to high moisture content is unstable. This material can be worked in some way to reduce the moisture content and then be used in the embankment. Unsuitable material is material that is not acceptable for use in the embankment for reasons other than the moisture content.

In cuts where unsuitable soil is encountered at final grade, the area should be undercut until a solid base is encountered (or for approximately 3 feet if solid material is not found) and replaced with suitable material. The Inspector should notify his supervisor of these locations. If not designated for an underdrain, it would be advisable to have geology investigate the area for possible subsurface water problems. This should be accomplished promptly to avoid delays in the completion of the project.

The end sections of all cuts shall be turned out and down the slope for better appearance. This turning out of the ends of cuts and the rounding at the top of the slope greatly improves the appearance of the finished highway section. Rounding of the tops and ends of excavation slopes and sloping is most economically done as the excavation progresses because of ready access for suitable equipment. Spot checks of cut and fill slopes should be made as the grading progresses.

When a borrow pit is located adjacent to the right of way and the roadway is in a cut section, it often provides a more pleasing appearance if the area between the two is graded to eliminate the ridge.

On contractor furnished borrow areas, the Contractor must obtain wildlife and archeological clearance, prior to any excavation.

4.02.10 ROCK EXCAVATION

It is the intent of the Contract Documents that rock be excavated closely to the designated limits. Blasting operations should be performed in a manner to preclude an excess of overbreakage. Cross sections for determining rock quantities should be taken as soon as the overburden has been removed, and at such time as to cause a minimum of interference with other operations.

Blasting operations should always be conducted under careful, competent supervision to prevent damage to adjacent property and injury to persons. The location of the area in which blasting is to be done will determine to a great extent, the procedure to be used. Both the size of the area to be shot at one time and the strength of the charges set therein should be determined by this factor. As a general rule, blasting charges should be as light as possible, yet of sufficient strength to adequately break up the material being shot. In restricted or urban areas where the hazard to surrounding life and property is at a maximum, it may be necessary to load fewer and closer spaced holes with lighter charges to break the material, while holding the possibility of

damage to a minimum. Blasting areas must be properly signed to inform all persons of potential hazard and to insure that all mobile radio units are turned off when in the immediate vicinity of explosive charges. All explosives must be stored in a secure manner in compliance with local, State and Federal laws and pertinent safety regulations.

Pre-split lines should be staked to reduce drilling errors and to enhance obtaining plan ditch elevations at the proper distance from centerline. The Contractor should give the grade Inspector ample notice on a daily basis when blasting operations will be commencing. The Inspector should constantly be checking the rock excavation procedures as they are just as important as rock embankment procedures.

4.02.11 CLASSIFICATION

The Project Manager shall keep in close touch with the work at all times, in order that he may be able to classify the excavated material intelligently. To classify material properly is a difficult task and requires careful study of the work as well as experience and judgment. The Project Manager and the Contractor should agree on the classification of material as it is uncovered.

If differences of opinion arise between the Project Manager and the Contractor regarding the classification of material, the Construction Engineer should confer with the District Engineer regarding the classification. The District Engineer, the Construction Engineer, the Project Manager and the Contractor should discuss the classification together, and if possible, arrive at some agreement. In case there is disagreement regarding the classification of excavation or any doubt in border-line cases, the District Engineer should secure the advice of the geologist. Construction Engineers should contact the geologist only through the District Engineer.

Excavation for a roadway may be classified or unclassified as provided for in the Contract Documents. When classified, each class of excavation will be required to be determined during the excavation, and the necessary measurements taken to compute the quantity.

4.02.12 FINISH GRADING

All of the embankment and excavated areas shall be finished in reasonably close conformity to the Contract Documents or as directed by the Engineer. Before finish grading begins, slope stakes should be in place and legible so that slopes and grades can be checked. The roadbed surface should be finished to the bluetop stakes set for final earth grade. The Inspector should check for compliance to the stakes and make random checks on the bluetop stakes to determine their continued accuracy. This check of the bluetop can be made with visual alignment with other stakes, and a check of actual to theoretical difference in elevation. If drainage is critical, grade stakes should be set for ditches and borrow pits to prevent any ponding.

Before the Contractor starts the finish grading operation, the Construction Engineer, Project Manager or Inspector will call to the Contractor's attention any corrections to be made and any clean-up work to be done. It is a recommended practice to give the Contractor a written list of features that must be corrected during finish grading. A complete inspection of the work should be made as soon as rough grading is completed to prepare the list of corrections for the Contractor. This inspection should include the Contractor's representative.

Continual checking is required during finish operations to determine that the work is done satisfactorily. Level readings shall be taken as necessary to check compliance with grade stakes and to assure proper drainage of all areas concerned.

Economic considerations usually make it impractical to trim rock slopes to the exact cross section; however, any dangerous or objectionable appearing projections should be removed. The finished slope should have a uniform appearance.

4.02.13 GRADING RECORDS

Particular attention must be given to the keeping of accurate, up-to-date records of all the work. Some of the more important items which should be documented and made a part of the project records are:

- Locations of actual balance points and notes concerning cross-haul that may have occurred, including reasons for the cross-hauling and the quantities involved.
- Measurements and notes made to substantiate the classification and quantity of the various materials encountered in the excavation. Reporting earthwork quantities will require thoughtful preparation. Vehicle measure and load count should generally be avoided. However, if other methods are impractical, it may be used within the limits of design quantities for the separate balances. Design quantities can be off, particularly if building demolition work has been done in these areas, as initial cross-sections do not take into consideration the basement excavations. Estimates should reflect any known changes in conditions.
- Records of dimensions, weights and calibrations which may be required by the Standard Specifications for water distribution and rolling equipment.
- Measurements of excavation below grade necessary for the removal of unstable or other undesirable materials.
- Daily record of events, including limits in which work was performed during the day, type and number of pieces of equipment used, number and classifications of labor used, and notes regarding discussions of any unusual nature with the Contractor's representative and which may lead to the issuance of specific recommendations or instructions to the Contractor. Weather conditions, for the purpose of determining a working day. List all District, Headquarters or FHWA visitors.
- A complete record of all density tests made to determine the acceptability of embankment, with remarks included which explain the corrective action taken at locations where failing test results were obtained and reasons for not making the required tests at other locations. The results of proof rolling should also be recorded.
- Complete record of equipment, labor and materials used in an operation that is determined to be extra work.
- Notes regarding damage to private property caused by the Contractor's equipment and/or operations should be noted and action taken recorded.
- Record of final disposition of salvageable materials.

4.02.14 CHECK LIST FOR GRADING

- Has Contractor submitted a "Progress Schedule"?
- Has Contractor's equipment been checked for compliance to the Standard Specifications?
- Has Contractor obtained written permission from property owners for use of their property for disposal of materials and debris?
- Have borrow areas been cleared for archeological evidence and have the necessary cross sections been obtained?
- Has the Survey Crew arranged to save, relocate or reference all important land monuments, survey points, bench marks, etc.?
- Are all grade computation sheets completed for entire project whereby all staking will be done to final grade?
- Has the Contractor been thoroughly informed about all trees, shrubs and bushes that are to be protected and spared?
- Have all property owners been notified of construction that will affect them?
- Has the limits of construction and clearing been properly set?
- Are all Standard Specifications, Special Provisions, agreements, plan drawings and notes thoroughly understood?
- Are arrangements made by the Contractor to protect all construction stakes?
- Are all cross sections taken that are needed to measure the excavation and embankment, and any other measurements necessary to compute pay quantities?
- Are all identification signs and posters that are required erected in a conspicuous location?
- Observe that adequate traffic control devices are used in conformance with the traffic control plan, and that the plan meets existing field conditions.
- Has removal of structures and obstructions been satisfactorily completed?
- Is the Contractor promptly refilling all holes left by the clearing and grubbing, removal of structures, or any other operation that makes water pockets?
- Are all soils reports for project and borrow pits complete?
- Is every effort being made to maintain proper drainage in all cut and fill areas? (Permanent and temporary)
- Are back slopes and side slopes being constructed to proper limits?
- Is Contractor's operation damaging any roads, private property, etc.?
- Is the Contractor applying good legal relations and responsibility to the public?
- Has the clearing and grubbing been approved for an area prior to building embankment?
- Has there been an agreement made with Contractor to determine dumping and rolling patterns?
- Is embankment being constructed to proper slope to obtain proper width and grade upon completion?
- Is excavation cut to comply with stakes?
- Are entire areas of cut and fill properly compacted and are embankments being built in horizontal layers?
- Are haul roads being monitored for dust control?

4.03 STRUCTURES

The information contained in the section is general in nature and the reader should refer to the Bridge Construction Manual for greater detail regarding structure construction. See www.ksdot.org/burdesign/bridge/constructionmanual/brconstruction.html

4.03.01 GENERAL

At the first opportunity, make a thorough study of the plans, Special Provisions, environmental requirements and the sections of the Standard Specifications relating to the work under the Contract. Review structure plans for possible errors in quantities and elevations. Most common errors are in the number of reinforcing bars. Check for conformance between dimensions given and elevations shown.

Inspect the structure site, and determine if conditions are as depicted on the plans or whether some changes may have taken place since the original survey was made. This investigation may indicate that the structure should be shifted slightly from the exact stationing shown on the plans to better fit existing conditions. There may be no latitude for such a shift in position in the case of a grade separation structure, but there is sometimes considerable opportunity to shift drainage structures. Contact the State Bridge Office before relocating any structure. Check project for pertinent markers to be removed or relocated.

On all structures where falsework is required, falsework plans shall be submitted to the Engineer and shall be stamped by a Licensed Professional Engineer.

4.03.02 LOCATION

The Project Manager should see that the structures are located in such a position as to provide for the most efficient drainage. In some cases, it may be advisable to change the location of culverts to obtain proper drainage. The life of a road depends to a large extent upon proper drainage, and care should be taken to see that the drainage system is properly planned and constructed in every detail.

Whenever possible, the Project Manager should verify the previous high water levels at each structure site before the structure is staked. If investigation shows that the structure is not designed for the proper high water level, or is not of sufficient length to accommodate the stream and insure the protection of the road and bridge, the Construction Engineer or Project Manager should notify the District Engineer at once.

If the culvert, as indicated on the plans, appears to be improperly located, inadequate or excessive in size, or if it is definitely not adapted to the location specified, the proper changes should be made by the Construction Engineer, with the approval of the District Engineer.

Entrance culverts should be of ample size and placed to drain the side ditches completely, so that no water will be impounded. Culverts under cross roads should be set as far back from the center line of the main line of the roadway as is consistent with efficient drainage, and placed at such a grade that the side ditches will be completely drained.

A properly constructed culvert should have a flow-line grade equal to or steeper than that of the channel in which it is built. The elevation of the inlet end of the culvert should be slightly higher than the existing flow-line of the watercourse. It is also advisable to raise the outlet end of the culvert slightly above the existing flow line of the watercourse in cases where the flow-line grade of the stream bed is not sufficiently steep to prevent silting at the lower end of the culvert. Failure to observe these precautions may result in silting up at both ends of the culvert. The practice of constructing culverts on a flat grade with a high drop at the lower end is not

recommended. All culverts should be constructed so that they will completely drain after the flow of surface water has ceased, except in cases where the plans indicate that the floor is to be placed below the flow-line elevation in order to provide protection against frost action.

When staking an abutment, the survey crew may have staked the centerline of bearing, centerline of abutment, or front or back face, depending on which line the unit is dimensioned from the plans. The Inspector should understand which line has been staked. The centerline of a pier is many times different from the centerline of bearing. This should always be checked with the survey crew. To prevent errors due to misunderstanding which lines are staked, the Inspector should confer with the survey crew in the layout of the bridges.

Every structure that is staked must be checked thoroughly to prevent staking errors. Different methods of staking should be used to give a check on the accuracy. One example would be to use triangulation to check straight centerline staking. Another example would be to stake the abutments and piers by locating the station of each, and then check the bridge layout by chaining the span lengths. On major structures, use a separate survey crew that is using a separate staking diagram.

The Inspector should cooperate with the Contractor in establishing lines and elevations necessary for the proper prosecution of the work, but it should be clearly understood that in so doing he is not relieving the Contractor of any responsibility for such lines and grades.

The Project Manager shall check the project with the plans to determine the correct amount of culvert pipe required and furnish the Contractor with the correct list of pipe to be used in placing his order.

4.03.03 INSPECTION

The Construction Engineer or Project Manager shall see that the construction work on each structure or portion of the structure is thoroughly inspected. The Inspector should check all the forms for line, elevation, plumbness, spacing, quality of lumber, bracing, strength, placement of reinforcing steel, etc. before any concrete is placed.

Prior to their use in the work, all materials should be inspected and approved. Most materials, particularly large quantities, are inspected at their point of storage or manufacture. Usually the test report is received in the Construction Engineer's Office before the materials arrive on the job site. In this instance, it is necessary to check the material markings, such as lot number or tag number, against the test report and also to visually inspect the material to insure against damage or deterioration between time of test and time of use. In some instances, it is possible for the project personnel to make visual inspections.

Occasionally, materials arrive on the job site prior to testing. In this instance, samples should be taken and forwarded to the central laboratory for testing. The procedures for this sampling are covered in Part V of this Manual and the Standard Specifications.

No material is to be incorporated in the work unless it has been tested and accepted or visually accepted on the job by the Engineer or his representative.

Although an Inspector may be given specific authorization to inspect certain work and enforce the requirements of the Contract Documents, he has to know the limitations of his authority. The problem usually arises as to when an Inspector can and cannot make the decisions that are required to be made. The case may occur where work is in progress and a questionable application of a specification requirement arises. If an immediate decision is needed, the Inspector should render such a decision if he judges the intent of the specification requirement to clearly warrant a reasonable interpretation. The decision should then be

confirmed by the Construction Engineer or Project Manager at the earliest opportunity. The Inspector should, however, initially take such matters to the Construction Engineer or Project Manager for interpretation, if time permits.

The Inspector should have a thorough understanding of accepted procedures for keeping field notebooks, diaries and records, including CMS entry, to assure proper documentation. The Inspector will probably be required to complete this reporting, as he may be the only person to observe a particular phase of construction and thereby be the only one qualified to give an accurate account of the information that is required for the records. Each Inspector should make sure all unusual occurrences and all construction work done by the Contractor are included in the project diary.

4.03.04 SAFETY

The Inspector should keep well informed as to the safety and the environmental protection practices that are required during any construction work. He should always be alert to any possible danger to himself, Contractor's personnel, the public and the environment. Following is a partial list of items that the Inspector should be familiar with to insure the safe completion of any construction project:

- Be familiar with the plans as to the location of underground facilities such as water mains, gas lines, communication lines, etc., in that construction can proceed without danger of damaging these facilities.
- Be familiar with safety practices while working around the various kinds of construction equipment to include an observation of overhead clearances to prevent damage to power lines, telephone lines, etc.
- Be familiar with the safety precautions involved in the various construction methods and practices, such as cofferdam construction, movement and storage of material, steel erection, concreting operations, demolition and dismantling of structures, etc.
- Observe that adequate traffic control devices are used in conformance with the traffic control plan, and insure that the plan meets the field conditions.
- Be familiar with the proper requirements to insure the integrity of the structure.
- Be familiar with any environmental requirements that are on file in the District Office.
- Be alert to any hazardous materials that may be in the area.

4.03.05 EXCAVATION

Before the structure excavation has begun, adequate elevations or cross sections of the site must be obtained. This is needed so that the quantity of "Excavation for Structures" can be accurately determined; however, prior to taking such elevations or sections, the Construction Engineer or Project Manager should review the plans to determine the limits for the structure excavation.

Normally, the excavation should be carried to the elevation of the footing shown on the plans. A possible exception would be in the event that a satisfactory foundation in rock can be secured at a higher elevation. It is imperative on a stream crossing that the footing be keyed into the rock or shale. If it appears that the footing elevation can be raised, maintain a keyed depth of 6 inches in rock and 12 inches in shale as a minimum. Contact the State Bridge Office prior to adjusting any footing elevations.

Always compare the material encountered at the footing elevation with that shown on the plans and the geology report. If the foundation material is not equivalent to that shown on the plans, and thus on which the design was based, it may be necessary to revise the footing elevation, increase the footing size, or redesign the unit. Assistance is readily available from the Bridge or Geology Departments. Do not hesitate to consult the District Construction Engineer for needed assistance.

If satisfactory material is not obtained at the plan elevation, first determine the nature and extent of the material below that level. This can usually be done by hand boring, rod sounding or digging a test hole, but in extreme cases, arrangements can be made to have one of the KDOT's boring rigs brought in. If satisfactory foundation material is found at a reasonable depth below plan elevation, lowering the footings will probably be the best solution; if not, a redesign may be required. All but nominal changes from plan elevations should be authorized in advance by the District Office. The Bridge Section of the Bureau of Design should be consulted before making any substantial changes.

If it becomes necessary to excavate between 2 to 6 feet below the plan elevation for the footing, the Standard Specifications list the basis of payment. Excavation below the 6 foot limit will become extra work, and an agreement must be reached in accordance with the Standard Specifications.

NOTE: Foundation Stabiliation should **only** be authorized for paid use in the construction of culverts, boxes and pipes.

4.03.06 COFFERDAMS

A cofferdam is defined as a substantially watertight enclosure which will permit the dry construction of the substructure without damage to the work. A cofferdam may be constructed with many building materials in many ways. The three most common ways are the earth-dike cofferdam, the steel sheet pile cofferdam and a well-point system.

The Construction Engineer or Project Manager should review the cofferdam design to assure that it is adequate for the particular location before allowing the Contractor to start excavation. Careless methods of constructing cofferdams, or the use of inadequate or unsuitable materials therein should not be permitted.

The Inspector should also review the layout which the Contractor has made on the ground for the cofferdam, and see that the Contractor has understood and used the construction stakes correctly, and that the layout is of sufficient size and properly located.

The Standard Specifications require that cofferdams be of dimensions greater than those for which payment for excavation is made. This is necessary in order to provide sufficient space between the sheeting and the footing forms, permit placing the pump suction line outside the footing area, and thus prevent water passing through the freshly placed concrete. It is also necessary to provide sufficient space for forms and insure full-size footings. If the area of the excavation for which payment is to be made is too small to permit ample working room at the bottom of the excavation due to the Contractor's operations, it is the Contractor's responsibility to start out with a larger-sized cofferdam and to excavate more material than will be measured for payment.

The earth dike cofferdam is commonly used where the depth of the water is fairly shallow and sound earth is available at the bridge site. Assuming the above conditions are present, the earth dike cofferdam is probably the most economical of all the methods, particularly where more than one unit may be enclosed with a single earth dike. However, it

does have disadvantages: the principle one being leakage of water through or under the dike. It is a good idea to pump the enclosed area and let the dike stand for a few days before taking drastic action to stop the leaks, because many times the leaks will seal themselves. If leakage of water continues, it can usually be stopped or slowed by the use of well points, or by driving steel sheet piling in the badly leaking areas. The Inspector should work closely with the Contractor so that the dikes are built as shown in the plans.

Another common type of cofferdam is the Steel Sheet Piling Cofferdam. It is usually constructed around a template made up of large timbers, H-piling or tube piling which serves as bracing when the enclosed area is de-watered. Care should be taken in driving the sheet pile to be sure that it is as plumb as possible, because out of plumb sheeting leads to many problems, particularly at the corners. Leakage of water through sheeting joints is common, but can usually be stopped or materially reduced by dropping fine cinders into the water outside the cofferdam or placing hay or straw around the outside at the points of the leakage.

In fine sands or liquid soils, wet excavation is a difficult problem unless the sheeting is tight enough to prevent the passage of these materials. Careful attention should be given to the size and strength of the shoring and waling timbers. If sheet piles are to resist a head of more than 5 feet of water or semi-fluid soil, their tops should be braced by wales which in turn are braced at their ends by the wales on the adjacent sides of the cofferdam or at intermediate points by horizontal timbers across the dam. In deep dams, similar wales and cross braces are installed at vertical intervals as the excavation progresses. It is particularly important to see that sufficient bracing is provided to keep the lower ends of the sheeting out at a proper distance from the footing lines. Steel sheeting may in some cases be entirely self-sustaining when driven to a considerable depth below the excavation level.

The strength required, however, can be approximated by regarding the sheet pile as a beam, either fixed at one end and free at the other, or as supported at both ends. The amount of lateral pressure against the sheeting is one-half the continued product of the weight of a cubic foot of water, the width of the sheet pile in feet, and the depth of the water in feet. The point of application of the resultant pressure is two-thirds of the depth of the water below the top of the water. The weight of liquid mud or sand is, of course, greater than that of water, and extreme accuracy is impossible, but the above method is generally sufficient for the purpose. The weights of semi-liquid soils may be varied between 63 pounds, the weight of 1 cubic foot of water, and 125 to 130 pounds, the approximate weight of quicksand.

The Contractor shall furnish 7 copies of detailed drawings of all cofferdams and cribbing to be used on all work adjacent to railroad tracks and no work shall be started on the excavation until the drawings are approved. These drawings shall be stamped by a licensed Professional Engineer.

The drawings shall be submitted by the Construction Engineer, Project Manager or the District Engineer to the Chief of Construction and Maintenance. The Chief of Construction and Maintenance will arrange for the review of the drawings (by the State Bridge Office), obtain approval by the interested railroad company, and distribute copies of the approved drawings. The drawings shall not be submitted directly to officials of the railroad company by the Contractor.

There are several general items to keep in mind about cofferdams:

- The cofferdam is a working tool of the Contractor, and he is responsible for its design and construction.

- The cofferdam should be constructed so that it does not seriously hinder navigation or the flow of the river.
- Its design should be adequate to provide a safe working area.
- The cofferdam, where required to protect adjacent property or roadways, should be "soil-engineered," and reviewed by the Construction Engineer to insure its adequacy and stability with proper wales and bracing.
- The Contractor is required, whenever asked by the Construction Engineer, to submit sketches of the proposed cofferdam for review.

4.03.07 CULVERT FOUNDATION

The foundation for the base of the culvert shall be stable enough to provide a firm work area for the workers. If after the excavation is completed the foundation is found to be unstable, the Project Manager should require the addition of foundation stabilization material to the unstable material. The stability of the culvert foundation should be carefully inspected to determine if the material encountered is unstable in its natural state, or if the Contractor's methods of excavation has caused the material to become unstable. The type of material to be used must meet with the approval of the Project Manager. Care should be taken to insure that the area below the wings is not overlooked for stabilization. Crushed stone is an excellent material to use for foundation stabilization. The KDOT will **not** pay for foundation stabilization material used to provide a work platform for the Contractor. Only foundation stabilization and concrete seal courses authorized by the Project Manager will be paid for their set contract price.

Culverts should never be placed on uncompacted earth fills. When it is necessary to place part of the culvert on a fill, gravel or other available material which can be readily compacted should be placed in the subgrade and thoroughly compacted so as to produce a firm foundation for the structure.

The Inspector must keep records of all conditions that are found in the construction of any structure. If different from that shown on the plans, always show the actual elevation of the footing or base and the type of material encountered,

Pumping that permits water flowing in contact with the fresh unset concrete should not be permitted. The sump from which water is pumped should be outside the footing forms.

4.03.08 BEARING PILES

Before using any piling, it is the Inspector's responsibility to make certain that the material has been tested and that the test reports are on file. Even though piling is accompanied by the proper test report or certification, they may be damaged in shipment or may have defects that had been overlooked during inspection and therefore, are subject to rejection at the job site. All piling shall be thoroughly inspected before being placed in the leads for driving. Rejected piles must be conspicuously marked.

The Inspector must check the bid item to ascertain the type of piling that is required for the structure. Most of the bid items designate the type of piling required but in some cases there is an option available. Check your bid item in the Contract Documents.

If integral abutments are shown on the Plans, pay extra attention to any notes on plans, or special provisions regarding the driving of piling.

a. Pile Lengths. Plans for structures involving piles generally give a pile layout for each foundation that will meet the design requirements, if no unforeseen conditions are encountered, and soil bearing proves to be equal to what was anticipated. The number and length of piles

shown on the plans were calculated as a result of studies of soil-borings and soundings made at the bridge site. However, information resulting from borings and soundings may not always show the true supporting value of the soil for a pile, and the actual required lengths of piles are required to be determined from the bearing information obtained from driving of test piling. If test piles are used, the Construction Engineer shall furnish the Contractor an itemized list of the length of bearing piles to order. If the lengths to be ordered vary materially from the plan lengths, the District Engineer shall be consulted before giving the order list to the Contractor. In cases where it is clearly evident that the test piling, driven as shown on the plans, do not give sufficient information for the ordering of the piling, the Construction Engineer may with advance approval, add additional test piling to the contract.

The list of piling as given to the Contractor shall designate the length required for each individual piling.

Delivery of ordered lengths of piling, for timber and precast concrete piles, will be in a single piece, unless otherwise provided in the contract.

Delivery of ordered lengths of steel shells for cast-in-place concrete piling and of steel piling will be in one or more pieces in accordance with the Contract Documents.

b. Test Piling. Test piling are driven as an aid in determining the required or ordered length of piling. From a study of the information obtained from the soil borings and the relative location of the proposed substructure units, the number and location of test piles are determined and shown on the plans. Usually one or more test piles are driven at each substructure unit, however, in a small structure, 1 or 2 test piles may be all that is required and shown on the plans.

During driving of the test pile, and beginning after the pile has penetrated the upper few feet of any soft or loose soil, measurements are to be taken and recorded to the rate of penetration of the pile at each foot interval for the total depth of penetration. The rate of penetration is the distance in inches that the pile penetrates the soil per blow of the hammer, and it is equal to 12 divided by the number of blows per foot interval. In the case of a test pile, it shall be determined by counting the number of blows of the hammer for each foot interval of penetration of the pile and computing the rate as the average for the foot interval. When driving a test piling, if 1 foot intervals are first marked on the pile and the 5 and 10 foot intervals designated, count of blows per foot interval may be made as the foot mark passes a fixed object and determination of the depth of penetration may be made by observing the foot interval mark at the ground level.

c. Log of Continuous Pile Driving for Abutment and Pier Footings. A Continuous Pile Driving Record should be recorded for a representative pile on each abutment and pier footing on a structure, and the record should be inclusive from the beginning of the drive to the final bearing of the pile. For structures under 750 feet in length, the above information will be required on 2 footings only. One of the piles should be in an abutment footing and the other in a pier footing near the opposite end of the structure. If the structure has no piling in the pier footings, then the record should be made for a pile in each abutment footing.

For structures over 750 feet in length, the continuous record stipulated above will be required on 3 footings, 1 on an abutment footing and 2 on pier footings. If the piers have no piling then the information will be recorded on one pile in each abutment.

The Log of Continuous Pile Driving Records are the same as records obtained for structures that have the bid item of test piles, and will therefore, not need to be recorded in cases where structures include the bid item of test piles.

d. Pile Driving Hammers. The Standard Specifications provide what the minimum weight of a gravity hammer must be and the energy rating an air, steam or diesel hammer must have for driving a pile to designated bearing. One purpose of this is to provide sufficient energy for driving the pile to the required bearing without incurring a set or penetration per blow that is so small, that when it is used in the formula for determining the bearing power of the pile, it may give unreliable results.

Each manufacturer of air, steam or diesel type pile driving hammers designate each size of each type of their hammers by a number and the rated energy output of the hammer. This designated energy rating is usually the maximum energy that the hammer is capable of producing as determined by the manufacturer by the use of formulae or by measurement of the energy developed.

The pile hammer data is included as a matter of information for the Inspector and includes the maximum rated energy in foot-pounds, the length of stroke, the weight of the ram (striking part), the number of blows per minute that the hammer must operate to give the rated energy, and other information relative to the operation of the hammer. For information see http://www.apevibro.com/asp/specs.asp "American Piledriving Equipment". Pile hammers may exist that are not included on this list and new hammers may have been developed since this list was last updated, for these hammers refer to the manufacturers data for the hammer provided by the Contractor.

The energy output of a hammer may not, during the driving of a pile, be the same as the rated energy. For a double or differential acting air or steam hammer there should be sufficient air or steam pressure at the hammer to operate the hammer at the number of blows per minute required for a given energy rating. The energy output will vary if the number of blows per minute deviates from the designated number.

For single acting air or steam hammers the energy output is a product of the weight of the ram and the length of the stroke. It may be assumed that the ram is operating at its full stroke when the required air or steam pressure is maintained at the hammer, and the hammer operates at the designated number of strokes per minute.

Diesel Hammers are of two types. One type has an open upper, whereby the ram is unrestricted in its rebound and is visible above the body of the hammer. The height of the rebound is taken as the length of the stroke for the following blow. Under normal driving conditions, the height of rebound will increase as the resistance of the pile to driving increases. There is a force exerted on the pile by the explosion of the charge of fuel and likewise there is a loss in the kinetic energy developed during the fall of the ram due to the cushioning effect the explosion of the fuel has on the impact of the ram. It is highly probable that the energy gain of one is about equal to the energy loss of the other, and therefore the energy output for this type of hammer in foot-pounds is the product of the weight of the ram and the length of stroke.

Measurement of the length of stroke is made by observation, reading on a graduated rod attached to and extending above the hammer body or shell, the height to which the top of the ram reaches in its rebound.

For the second type of diesel hammer, the ram operates in a cylinder which is closed at the top and the upstroke of the ram traps and compresses air in the bounce chamber which is the

space in the cylinder above the top of the ram. The energy stored in the compressed air is imparted to the ram on the downward stroke.

As the resistance of the pile increases, the force of explosion of the diesel fuel acting on the ram in its upstroke increases, and the increased energy of the ram increases the energy stored in the compressed air chamber which in turn provides an increase in the force imparted to the ram at the start of its downstroke. Thus, it is evident that the energy output of the hammer, within the limits of its rated energy output, will increase as the resistance of the pile being driven increases.

Preignition means that the fuel combusts before impact occurs. Preignition reduces the ram impact velocity and cushions the impact. When a hammer preignites, the full ram energy is not transmitted to the pile, but rather returned to the ram, causing the stroke to be very high. The low energy in the pile results in a high blow count. Preignition, therefore, has all the symptoms of a hard driving condition at a potentially low soil resistance. Over-heated hammers often preignite after long periods of hard driving when lubrication oil starts to burn or fuel vaporizes prematurely due to heat.

The following are signs of preignition in hard driving:

- Black smoke while strokes are high.
- Flames in exhaust ports.
- Blistering paint (due to excessive heat).
- No obvious metal to metal impact sound.

If preignition is suspected, then the hammer should be stopped, allowed to cool down for an hour, and then restarted. Stroke and blow count should then be accurately monitored. If both stroke and blow counts are lower during the first 2 minutes after the resumption of driving, then proof exists of a preignition condition before the cooling period was established.

Most atomized fuel injection hammers have some design preignition. The fuel usually starts to burn when the ram is a small distance above the impact block. If the ram descends slowly, the pressure has more time to act on the ram than in the case of a high stroke, when the ram reaches the impact block within a short time. Thus, in hard driving with high strokes, and therefore, high ram velocities, "design preignition" is of little consequence. For easy driving, it is often beneficial to keep the hammer running.

Followers should not be permitted when driving piling except with permission from the District Engineer. This does not refer to the pile cap conforming to the shape of the pile used to protect and guide the pile in the leads, but to the long heavy timber which is sometimes set on top of the pile to facilitate driving at low levels without lowering the pile driver or extending the leads.

The following are acceptable types of pile cap material. If the Contractor proposes a material type that is not included in this list, then contact the Bureau of Materials and Research.

(1) Micarta (Conbest) - This is an electrical insulating material composed of fabric and phenol. It must be replaced when it starts to powderize or when it disintegrates into various layers.

(2) Nylon (Blue or other colors) - This material comes in 2 inch thick blocks. Occasional vertical cracking is not detrimental. However, after the cushion develops horizontal cracks, it should be replaced.

(3) Hamortex - This material consists of metallized paper reels. It has good engineering properties but needs attention as it may compress or disintegrate.

(4) Force 10, Forbon, and Fosterlon - These materials are provided by manufacturers of pile driving equipment.

(5) Aluminum - Aluminum is often used to separate layers of softer cushioning material. The aluminum does no cushioning itself; however, it is thought to extract the heat from the cushion stack. Once the aluminum is deformed or broken it should be replaced.

(6) NOTE: Wood (plywood or hardwood) will probably remain the most common type of material used as a pile cushion for gravity hammers. Wood should only be used with gravity hammers.

e. Driving Methods. Before starting driving of piling, the excavation shall be complete. In embankment areas, the embankment shall be completed to the bottom of substructure concrete elevation. Proper elevation of fill or cut is especially critical in cases where battered pile are being constructed. On certain wall-type abutments, an error in grade could easily result in the piling being too close to or possibly outside the wall forms. After the Contractor completes the actual pile layout, it should be thoroughly checked by the Inspector.

After a pile has been placed in position for driving, a check should be made to determine that it is plumb or has the correct batter. Determination should be made during the driving so that the pile is retained in its correct position. Checking the batter of a pile may be made with a spirit level attached to a board which has one edge cut to the required pile batter.

Upon completion of one unit and prior to driving operation in the next unit, it is advisable, whenever possible, to measure the distance between the units to assure that the location of the unit as originally staked is correct.

The chance of piling being heaved up during the driving of adjacent piling is the greatest when driving timber or treated timber piling through wet cohesive soils. This is due to the heaving tendency of this type of soil and because timber and treated timber piling are generally closer spaced than other types. The Contractor shall re-drive any heaved piles and remove any upheaved material at his own expense. Treated timber piling shall be handled with care so as not to damage the treated surface. The use of tongs, cant hooks and pike poles is not allowed. A minimum of 3 coats of preservative, as specified in the Standard Specifications, shall be brushed on cuts or holes.

When using the gravity hammer, care should be taken to see that there is no undue friction in the drums and no excess kinking or tangling in the cable which will cause an excessive retardation of the fall of the hammer. When checking the penetration per blow, make sure that the operator does not cushion the blow by applying the brakes to the drum. The hammer should drop freely, and the cable should slap or show evidence of being slack when the hammer hits the pile cap.

When short piles are driven to a stratum which is known to be impenetrable and of considerable thickness, special care should be taken to avoid injury to the piling by overdriving. It may be necessary to reduce the fall of the hammer.

It may also be possible to observe during the driving that the penetration is considerably less than that which indicates practical refusal in which case no further test would be necessary, and no further driving of the pile should be attempted. In this case it is important that all piling be reseated after all piling in the footing are driven as there is a tendency in driving additional piles, to raise those pile already in place. The Inspector should satisfy himself that all piling are

driven down to positive contact with the impenetrable stratum before allowing the piles to be cut off.

When making the test blows, there should be little or no bouncing of the hammer. If the hammer bounces to any considerable extent, either the fall is too great, the pile has struck a solid obstacle, or the hammer is too light. When bouncing occurs, careful trials and discriminating judgment are required to determine the cause. Decreasing the height of fall will sometimes decrease the bouncing and increase the effect of the blow. If the pile has struck an impenetrable stratum or boulder, and the driving is continued, it is probable that there will be a small and continuous apparent penetration due to the brooming or a failure of the pile. In hard driving, there is likely to be a small rebound of the hammer due to the elastic compression of the pile. The penetration to be used in the formulas should not be taken until it has attained a reasonably uniform or uniformly decreasing rate.

If the piling cannot be driven to the minimum penetration elevation shown on the plans by ordinary driving methods, the Inspector may require the Contractor to operate water or steam jets during driving operations or to use a heavier or larger pile hammer, unless it is very evident that the piling has stopped on an impenetrable stratum.

If the piling are too short to obtain minimum bearing resistance, the driving of piling should be suspended until it can be determined whether:

- longer piling should be obtained
- the piles should be spliced or
- the design should be revised by increasing the number of piling or lowering the footing to enable the shorter piling to be used.

The District Construction Engineer should be immediately consulted if any of these changes seem necessary. For timber piles, short pile splices should not be permitted. Splices shall be made in accordance with the provisions of the Standard Specifications.

Frequent obstructions are encountered which deflect the course of the pile or render it impossible to drive. Driving should be discontinued when it is apparent that the pile is brooming or failing. Piles are damaged and rendered ineffective by continued driving after they have been driven to practical refusal.

Prestressed or precast concrete piles must be driven with steam, air or diesel hammers. Make sure the rating of the hammer used to drive any piling meets the minimum requirements stated in the Standard Specifications.

The driving of piling, after specified penetration has been obtained, to bearing values that are greatly in excess of plan requirements for the purpose of using up ordered lengths should not be permitted.

The gauge specified for steel shells is the minimum gauge permitted to be furnished. When driving through adverse subsoil conditions, it is the Contractor's responsibility to furnish thicker shells or provide reinforcement of shells to obtain the strength and rigidity necessary for driving while remaining substantially watertight.

To the extent practicable, all pile driving within a substructure unit should be completed before any concrete is placed in that unit. Should it become necessary to drive piling within a minimum of 15 feet from the previously placed concrete, such operations should be delayed until the concrete has attained the minimum age of 7 days.

4.03.09 DRILLED SHAFTS

Refer to the Standard Specifications for details on constructing drilled shafts.

Prior to constructing drilled shafts, complete adjacent excavation of the entire pier.

Depending on site conditions and requirements in the plans, construct the drilled shaft by either the uncased or cased method.

The uncased method is used at locations free of caving soil or excess water inflow into the excavated shaft.

The cased method is used when indicated in the Contract Documents, or when actual conditions show the shaft is prone to caving soil or has excess water inflow. Use either a smooth, thick-walled permanent casing, or a combination of a smooth, thick-walled temporary **and** permanent CMP casing together. Never use a temporary casing without also using a permanent casing.

The reinforcing steel cage shall be completely assembled and supported by a method that will assure it is held in proper position while concrete is being poured.

Prior to concrete placement, verify that a minimum of 75% of the base of each shaft has less than ½ inch of sediment, either by visual inspection or underwater inspection using probes.

Depending on site conditions and requirements of the Standard Specifications, place concrete by either the dry pour or wet pour method.

For both the dry pour method and wet pour method there are common requirements for concrete placed in both uncased and cased shafts:

- Insure concrete is placed in the shaft with a continuous operation, without construction joints.
- Do not vibrate the concrete.
- Insure the contractor uses non-aluminum concrete pump discharge tubes and tremie tubes.

Dry Pour Method:

- Insure falling concrete does not come into contact with the reinforcing steel and wire supports.
- For an uncased shaft, the maximum fall for concrete is 5 feet.
- For a cased shaft, concrete may free fall to the bottom. Extend the centering device a minimum of 8 feet into the shaft to control the fall.

Wet Pour Method:

- Before concrete is placed, insure the water level is equal to or greater than the surrounding groundwater or river, and is static.
- Insure tremie tubes and extension tubes are watertight, and labeled in 1 foot increments starting from the bottom.
- Insure no water enters the tube while charging with concrete.
- During concrete placement, always maintain a minimum of 7 feet head of concrete. Prior to raising the tube, determine the top elevation of the fresh concrete.
- When the concrete reaches the top of the shaft, insure concrete is over-pumped to expel any excess water, debris or unsound concrete.

Do not remove the temporary casing until the shaft is completed and cured.

When both a temporary and a permanent casing are used, the space between them should be backfilled with the material specified in the Contract Documents. This may be done in stages as long as the bottom of the temporary casing remains below the top of the backfill material at all times.

4.03.10 SUPERSTRUCTURES

a. Falsework Construction. The Standard Specifications state that 7 copies of detailed falsework plans on these structures will be submitted to the Engineer for review and approval by the Engineer and, if applicable, the railroad company on the following structures:

- All structures over or under railroad tracks.
- All structures built over highways or streets carrying traffic.
- All structures carrying highway traffic during construction.
- All structures requiring falsework plans as noted on the construction plans.

For structures not listed above, the Construction Engineer shall be furnished 3 copies of detail plans of falsework, stamped by a licensed Professional Engineer, for review prior to construction. For normal structural steel, prestressed concrete girder and RCB construction, falsework or formwork details for deck construction are not required. However, the Engineer may request such details to verify the structural capacity and requirements for bracing of slab overhangs, needlebeams and formwork support.

b. Structural Steel Construction. The Standard Specifications require that the Contractor provide written notification of the name and location of the steel fabricator to the State Bridge Engineer and the Chief, Bureau of Materials and Research within 10 days after the Contract is signed. Prior to the fabrication of any structural steel or castings, the Contractor or fabricator is to submit shop drawings to the Engineer for approval. The Contractor shall also give enough advance notice to the Engineer prior to the beginning of the fabrication work so inspection can be provided.

All structural steel is to be handled in such a manner to keep it clean and prevent damage and distortion. It is to be stored above the ground on such supports necessary to keep it free of dirt, grease, corrosion and other foreign matter. Girders and beams shall be supported to prevent change in design camber or warping.

The Contractor is required to submit detail plans for the erection of the structural steel. The plans shall include shop details, camber diagrams, shipping statements and lists of field bolts and parts.

When the structural steel is to be bolted, the Inspector shall observe the installation to determine that the proper procedure is used and that all connections are tightened according to the Contract Documents. When setting the anchor units and expansion joints, close attention shall be paid to the design temperature for the steel, and the corrections to be made for the difference in design temperature and the ambient temperature at the time of erection.

c. Structure Construction. Forms for concrete may be metal or wood and shall be mortar tight and rigid enough to prevent distortion due to the placement of concrete or other loads on the structure. The forms shall be capable of being removed without causing injury to the concrete. Forms shall be handled and stored in such a manner to prevent warping and shrinkage.

Metal forms shall be kept free of rust, grease or other foreign matter. Aluminum forms, floats, chutes etc. will not be allowed for use.

The Inspector should check the forms and reinforcing steel for spacing, clearance and cleanliness prior to the placement of the concrete. Anchor bolt locations should be checked prior to placement of concrete so as not to drill into the reinforcing steel.

Concrete shall be placed in such a manner to avoid segregation of the materials and displacement of the reinforcing steel. The concrete shall not be allowed to fall more than 5 feet without the use of closed chutes or pipes.

Placement of concrete in any floor slab shall be one continuous operation unless joints are provided on the plans or authorized by the Engineer. The Contractor may submit an alternate pouring sequence for review. The alternate sequence shall include the proposed rate of concrete placement in cubic yards per hour, the plant capacity, a description of the equipment used in placing the concrete, proposed admixtures and the quantity of concrete in each placing sequence. Approval of the alternate sequence is required prior to placement of the concrete.

Consolidation of concrete for bridge decks shall be accomplished by the use of internal (spud or tube type) vibrators. The vibrators shall be mounted on a mechanical device capable of being operated so that vibrator insertions are made on a maximum of 12 inch centers over the entire surface of the deck. The vibration time per insertion shall be between 5 to 15 seconds. Hand held vibrators will be required in inaccessible and confined areas.

The Contractor should always position the finish machine over the entire area of the bridge deck to verify the proper positioning of the machine and reinforcing steel prior to placing concrete. Texturing a finished bridge deck not receiving an overlay will be by the use of a finned float in accordance with the Contract Documents. Decks that are to receive an overlay are to receive an acceptable float or machine pan finish.

Initial curing of bridge decks shall be by an application of liquid membrane-forming compound. Curing membrane shall be sprayed in 2 coats while the surface is wet but no free moisture is present. The spraying equipment shall be capable of maintaining a constant and uniform pressure.

Unless shown otherwise, handrail should not be placed until the falsework has been struck or removed. As a rule of thumb, approximately one half of the camber will come out of the bridge deck once the falsework has been removed; therefore the handrail should be constructed using only about one half of the camber shown for the bridge deck.

4.03.11 BRIDGE DECK WEARING SURFACE

Finishing of the bridge deck will be performed according to the Standard Specifications. However, some of the more common problems encountered are listed below and should be discussed at the Pre-Construction Conference.

- Check equipment for any hydraulic fluid leaks and correct when found.
- At the present time, texturing of bridge decks with a finned float is required and improper texturing may result in the Contractor removing the surface and redoing the wearing surface or texturing the bridge with a mechanical transverse grooving machine all at the Contractor's expense.
- Following the placement of the bridge deck wearing surface, it should be checked for trueness by using a traveling straight edge or other means. The straight edge should be run at each wheel path to insure the proper ride. If areas are identified that do not meet the requirements of the Contract Documents corrective action should be taken.

4.04 PORTLAND CEMENT CONCRETE PAVEMENT

4.04.01 GENERAL

The Inspector assigned to a paving project is responsible for the quality of the work. A Contractor with modern equipment and a good organization can pave more than a mile per day. With this speed of operation, the Project Manager and his personnel must be on top of the situation at all times. Problems that arise must be taken care of immediately by the Project Manager. The inspection personnel working in the many areas of a paving operation must be familiar with the plans, Standard Specifications, and Special Provisions, as they apply to their area of responsibility. Above all, the inspection personnel and the Contractor's personnel on the project must keep the lines of communication open at all times.

4.04.02 CONCRETE PAVEMENT METHODS

a. Fixed Form Method: This is the method that has been used for many years, and consists primarily of setting metal side forms to proper line and grade, with the paving train using the forms as tracks. The placement of transverse joints (baskets) should be made prior to starting concrete placement, unless specified as plain pavement. The equipment in the paving train consists of some type of spreading device, a machine which vibrates and strikes off the fresh concrete followed by a burlap drag, tining and then curing.

b. Slip Form Method: This method is quite similar to the Fixed Form Method; however, in lieu of setting the side forms, the "Slip form paver" extrudes the final product. The slip form paver does the following operations; spreads the concrete, consolidates through vibration and tamping, shapes, extrudes, finishes, controls width, thickness and riding surface. When the depth is controlled by the paver in the free floating method, it is extremely important to check the subgrade for plan elevation and a smooth surface. Most of the other equipment in the paving train is quite similar to the fixed form method in function.

4.04.03 ORGANIZATION OF PORTLAND CEMENT CONCRETE PAVEMENT PROJECT

The Construction Engineer shall have under his immediate supervision the following personnel, who shall be responsible to him for the proper control of the various phases of the work:

- **Project Manager:** The Project Manager will be the field coordinator for all work done by KDOT personnel assigned to the project, and will have the authority to act in the Construction Engineer's absence.
- **Survey Party Chief** (if staking is done by KDOT): The Survey Party Chief shall be responsible for staking out the work to the proper line and grade as indicated in the Contract Documents.
- **Concrete Plant Inspector:** The Inspector shall insure that all Contractors' operations at the concrete plant are in accordance with current Standard Specifications.
- **The Slab Inspector:** The Inspector shall insure that the Contractor satisfactorily places and cures the properly proportioned concrete along the lines and grade established by the Survey Party.

The above noted personnel must inter-act between themselves and the Contractor's key field personnel. It is extremely important that KDOT personnel be familiar with the entire

organization of the Contractor, and the authority of each member of his organization. Prior to starting the actual operation, the key personnel for the KDOT and the Contractor should hold a field meeting in order to arrive at the plan of operation. (NOTE: This should not be done at the pre-construction conference but held separately). This plan will become the operating schedule for the concrete pavement and should be written up as the plan schedule.

4.04.04 DUTIES AND RESPONSIBILITIES OF THE PROJECT ENGINEER OR PROJECT MANAGER

The first duty of the Project Manager on a concrete paving job is to be completely familiar with all details of construction and plant inspection. He must instruct his assistants, explain their duties and be sure they fully understand their responsibilities. He must coordinate the work of the personnel assigned to the project and must check their work frequently to see that they are performing their duties. The Project Manager is responsible for both the performance and the quality of the inspection performed by the personnel assigned to him.

The Project Manager must also see to it that the Contractor makes arrangements for getting the work done according to the Standard Specifications. The Contractor must have the equipment calibrated as required by the Standard Specifications in the presence of the Inspector and the Contractor or his representative. He should make sure that the Contractor plans to use enough qualified personnel and that the Contractor's equipment meets requirements. He should review with the Contractor's Superintendent, the Contractor's plans in order to prepare for day to day changes in the schedule of operation. It is the responsibility of the Project Manager to see that the project progresses smoothly, to anticipate problems, and to eliminate as many as possible.

4.04.05 DUTIES AND RESPONSIBILITIES OF THE SURVEY PARTY CHIEF

Note: In most cases the Contractor is responsible for construction staking and will therefore be responsible for the following activities.

- **Check Plan Grades:**

NOTE: It is expected that judgment has been used in the construction of the earth grade, and that for various reasons, slight grade changes have been necessary. Plans for concrete pavement are prepared in most cases along with the grading plans, and therefore any changes of grade in the grading operation will also apply to the pavement grade.

- Check plan grade of ramps, particularly at tie-in to main slab, to insure a satisfactory tie-in. Check locations of construction joints and keyways.
- Check grades of curb inlets, gutter inlets and other drainage structures for proper direction of drainage.
- Prepare field books necessary for the staking of the concrete pavement, inlets, pipes etc.
    - Check grade and form lines for pavement being constructed by the fixed form method.
    - Generally, one line for the slip form method, either based on an edge of pavement or other reference point, agreed to by the Project Manager and the Contractor's Superintendent.
- Keep record of any changes made in alignment or adjustments of grade in field book. All changes must be cleared with the Project Manager.

- Stake transition points with lath or flag, for end normal crown, and begin normal crown on spirals and superelevated sections. Also flag points on dog ear turnouts for ramp tie-ins.

4.04.06 DUTIES AND RESPONSIBILITIES OF THE CONCRETE PLANT INSPECTOR

The Inspector shall insure that the Contractor maintains proper control of materials and batching operations. His duties will start at the time materials are being accumulated and continue until final records for the project are complete. Materials will be field tested at the concrete plant, which is a function of the Inspector. He must be familiar with the source and type of aggregate intended for use, mix proportions, moisture content, method of determining scale weights, batching equipment, tests and reports. The Inspector should familiarize himself with the manufacturer's manual and the batching equipment to understand its operation. The Contractor will normally have this information; if not, it may be obtained from the manufacturer's representative.

Aggregate Check List (Checks to be maintained for each individual aggregate)

- Do aggregates come from approved sources?
- Are quality requirements up to date?
- Type of material.
- Source.
- Size range.
- The aggregates will be stockpiled at the batch plant and accepted at the closest point of usage.
    - Is method of building up the stockpiles approved?
    - What equipment is used around stockpiles? On the stockpiles?
    - Are aggregate stockpiles kept completely separated?
    - How are aggregates removed from the stockpile? What part of the stockpile?
    - Is contamination or degradation prevented during handling?
    - Is all segregation or variation prevented in the stockpile?
- Are the aggregate stockpiles free-draining?
- Is all frozen aggregate prevented from getting into the batch plant bins?
- Are Contractor quality control test reports available?
- Are all aggregates covered by certifications showing the locations of the deposits from which the aggregates were produced?

Cement and/or Fly Ash Checklist

- Type: Brand and mill location (note any extra quality requirements).
- On what basis is cement and/or fly ash accepted?
- Is cement and/or fly ash hauled by rail? By truck? Is cement and/or fly ash completely protected from moisture and contamination during hauling?
- Type and size of cement and/or fly ash storage at batch plant:
    - Are storage facilities of adequate size for all operations?
    - Do storage facilities completely protect the cement and/or fly ash during wet windy weather and prevent any contamination or loss?

    - Are storage facilities in good condition?
    - Are air jets or mechanical vibration used to loosen cement and/or fly ash?
- **e.** Type of cement and/or fly ash batching and weighing equipment:
    - Make and model
    - Is the overall appearance of the equipment good, and does it appear to be properly maintained?
    - Does the equipment consistently operate without failure or variation?
    - Is the cement scale properly maintained?
    - Is the cement scale protected from dirt, moisture, and mechanical damage?
- Is a record kept of all cement and/or fly ash used in concrete which is wasted or placed outside of project?
- Is discharge of the weighed cement and/or fly ash properly protected to prevent loss?

Batching Plant and Equipment

Prior to the start of batching operations, the Inspector must thoroughly check, verify calibrations, and assure that all equipment is of an approved design, and complies with the requirements of the Standard Specifications. Hoppers or bins should be set level and loaded for at least 24 hours prior to calibration. The scales shall be inspected and calibrated by an approved scale company. Initial and periodic calibration of each weighing device shall be accurate to within 0.25 % throughout the range of use. The Contractor shall have the scales checked, adjusted and certified by an approved testing firm or laboratory of the Kansas State Board of Agriculture or a qualified manufacturer's representative at

- a maximum of 6 month intervals;
- at each plant set up, except for small units such as three sack mixers which are moved frequently, etc;
- when scales are repaired, and;
- any other time deemed necessary by the Engineer. The Contractor shall have available, not less than 50 pound weights for calibration and verification of the scales. The Inspector may check the calibration with the weights at any time that it is deemed necessary during the operation.

Each mixer shall have attached, in a prominent place, a manufacturer's plate showing the capacity of the drum in terms of volume of mixed concrete and the speed of rotation of the mixing drum or blades.

Bins for batching aggregates or bulk cement and/or fly ash, should be tight and constructed in such a manner that there is a free flow of material with no accumulation in the corners, and should be loaded in a way to avoid segregation, contamination or coning against bottom of bin, and should be constructed to empty completely. Cement and/or fly ash shall be weighed in a separate hopper from the aggregates.

All working parts, such as knife edges, shackles and weighing arms should be in good condition, free from avoidable friction, and readily accessible for inspection and cleaning, as well as being protected from falling or adhering material. There should be no attachments to scales or weighing hoppers which might restrict the free movement of any part of the weighing equipment. Cement and/or fly ash hoppers should be vented to permit escape of air, and should be sealed to prevent loss of cement and/or fly ash during discharge. There should be a periodic check of the amount of cement and/or fly ash actually used, by comparing the total amount received to the theoretical amount used, taking into account the amount remaining on hand and

amount wasted. This check should be made daily, if possible. Before concrete construction operations are started, the facilities for the batching and mixing of concrete should be inspected to determine that the plant meets all specification requirements, and that the plant has the capability for producing concrete of the required uniformity and quality. In some instances, detailed plant requirements may not be spelled out in the specification, and it will be necessary to evaluate the plant on the basis of standards commonly accepted. Two things can be accomplished by the use of a guide or check list in the inspection of a batch plant; first, inspection of all details required by the check list will indicate whether the materials, plant and operating procedures meet all requirements of the Standard Specifications, and whether they conform to the normally accepted standards; second, this detailed inspection using the check list for a guide will familiarize the Inspector with all features of the plant, from the aggregate storage facilities up to final mixing operations and will alert him to the existence of equipment and procedures of marginal quality which will require close supervision during operation.

NOTE: These check lists can be reproduced in a form to fit the type of mixing operation and should be referred to frequently.

Check List for Aggregate Handling from Stockpiles to Weigh Hopper

- How is aggregate moved from stockpiles to batch plant bins?
    - Does the method prevent contamination and degradation?
    - Is the equipment capacity adequate?
- How is coarse aggregate dropped into bins (vertical drop, throw against side of bins, against baffle, rock ladder, etc.)? Are segregation and breakage prevented?
- Are different aggregates completely separated at all times?
    - Is spillage into the wrong bin prevented during filling?
    - Is run over between bins prevented when they are full?
- Is this sufficient for all operations?

NOTE: Storage of aggregates should be controlled so that the materials are kept as uniform as possible in both grading and moisture content, and protected from contamination. Standard Specifications require uniformity of grading at the time of batching, therefore, excessive segregation and breakage should be avoided in stockpiling aggregates. Conveyors are commonly used in materials handling, and it is an important part of inspection to see that materials are not allowed to fall from heights such that large or small particles are separated, nor should aggregates be allowed to run down the slope of the pile. Baffles may be necessary to break the fall and prevent excessive segregation.

Batching and Weighing Check List

- What type of batching and weighing equipment is used?
    - Make and model. What is the condition?
    - Is the batching and weighing equipment adequately housed and protected?
        - Does the Contractor have available not less than 50 pound weights of standard test for testing of all scales?
    - Is the concrete central-mixed, batched into truck mixers, or dry batched?
- Are aggregates weighed separately or cumulatively on the same scale?
- How are the scales read (springless dial, or beam with over-under indicator)? Can the operator see the dial or indicator easily?

- What is the general condition of the scale parts?
    - Condition of knife edges. Are adjustable knife edges tight?
    - Condition of pivots. Do shackles ride free?
    - Condition of dash pots. Are they free of noticeable binding?
- How often are the scales checked?
    - Date last checked. By whom?
    - Are scales zero-balanced at frequent intervals?
- How are gates actuated? Is there any provision for dribble feed on the gates?
- If controls operate a conveyor instead of gates, is the control adequate and approved?
- Is the batcher arranged to permit convenient addition or removal of material?
- Can batch weights be conveniently changed to correct for aggregate moisture?
- Does weigh hopper (hoppers) always empty completely?
- Is a qualified operator in charge of the plant at all times?
- Is any blending material added to improve aggregate gradations? Is the method approved?
- If plant has automatic gate shutoff, is provision made for aggregate that is in the air when gate shuts?

Operation of Plant: (as to accuracy)

When changing scale weights for batch correction in the aggregates, be sure that set screws holding the counterweights in position on the beam arms, are firmly tightened by the operator. Constant vibration around the plant tends to move these weights causing an incorrect amount of aggregate to enter the batch. (NOTE: The position of the weights should be checked frequently).

Since a lot of central mix plants are controlled from a central control console location, some additional checks are required. Some of these additional items are as follows:

- Are all dial settings the same as the scale settings?
- Are the over and under settings correct on the aggregate and cement dials?
- Is the mixer equipped with an approved timing device which will automatically lock the discharge lever when the drum has been charged, and release it at the end of the mixing period?
- Is the time setting correct for the mixing cycles?
- Are the panel lights all working properly?
- Is the console operator competent and reliable?
- Is the control trailer located where all plant functions can be observed?
- Is the moisture control device calibrated to give accurate moisture readings?
- Is the admixture setting correct?
- When plant is in full automatic sequence, can operator override mixing time and use manual controls?

It will be found that automatic plant operation will require considerably more documentation and pre-construction inspection, however, if everything is pre-planned and checked before starting, less work is required during operation.

Inspection of Trucks

The delivery of the concrete from the plant to the paver is a very important part of the overall operation of concrete paving. Depending on the Contractor's operation, there may be a number of ways this can be done.

a. Non-agitating Delivery Trucks. Non-agitating units shall have interior surfaces that are smooth and water tight, having gates or other means to control the concrete discharge. The interiors shall be free from excessive accumulations of hardened concrete and from other obstructions or deterioration sufficient to interfere with the proper discharge of concrete. The interiors shall be free of any foreign materials which may contaminate fresh concrete.

b. Agitator Delivery Trucks. Everything mentioned above for non-agitating units applies to agitating units. The paddles or blades should not have a build up of mortar or concrete, nor be worn to excess.

c. Ready Mix Trucks. Check for manufacturer's capacity plate, which shows the volume of concrete that can be properly mixed or agitated within the drum, recommended mixing and agitating speeds.

Check to see that pick-up and throw over blades are not worn excessively. Cracked or broken blades must be repaired or replaced.

Check to see that drum is equipped with a counter, in good working order, to record revolutions of the drum at mixing and agitating speeds.

Check to see that drums are generally clean and free of excess mortar build up or other obstructions that may impair mixing or discharge of fresh concrete.

Check water valves for positive shutoff.

Control of Concrete Mix Accurate proportioning of aggregate and cement and/or fly ash.

The Contractor will make free moisture tests at least twice daily (minimum of one in A.M. and one in P.M.) and more frequently if in the judgment of the Inspector there has been a change in moisture content. The Inspector will observe the testing procedures. These tests are required so that batch weights may be adjusted, and to insure that the maximum water-cement and/or fly ash ratio is not being exceeded.

If rain comes at any time while the aggregate bins are loaded, the water will collect in the material at the bottom of the bins. Two or three truck loads of each size aggregate should be taken from the bins and hauled back into the stockpiles before batching begins. When this is not done, the moisture content of the first few batches will be excessive and sloppy concrete will result. Many contractors allow the bins to empty at the end of the day for the above reason. The proper control of the moisture and proper changes in the mix will result in uniform and consistent concrete. Therefore, the mixes must be regularly corrected for aggregate moisture changes.

NOTE: Uniformity of mixture is probably the most important point that should be made, and stockpiling can measurably improve this condition and help provide a consistent slump. The Slab Inspector must be advised immediately of any change in the mix due to moisture correction.

It shall also be the responsibility of the Concrete Plant Inspector to:

- Care for and test beam specimens (see Part V of the Construction Manual for Testing Procedures).
- Keep records of materials received, used and on hand.

4.04.07 DUTIES AND RESPONSIBILITIES OF THE SLAB INSPECTOR

The Inspector shall insure that the Contractor places concrete in a satisfactory manner to the line and grade shown on the plans.

Each operation consists of a number of small steps and the Inspector must check every detail of each step. He must be on the job constantly and see that every part of the work is done the right way and at the right time. The quality of the pavement depends largely on the amount of attention the Inspector pays to the details of the work.

Some of the more important points of concrete pavement construction are listed here.

a. Preparation of the Subgrade

A subgrade that was once compacted to specification density, but which has lost density, must be brought to required moisture content and density. Any loose material added to fill low spots must be compacted by rolling with the specified rollers until those parts of the subgrade are brought to a uniform density, meeting the specification requirements.

Before any subbase material is placed, the subgrade must be checked for grade, cross section and drainage. It is especially important that there be no ruts or depressions that will hold water. Material in any soft or yielding spots should be removed and replaced with good subgrade material.

On many of the projects, lime treated subgrade will be a part of the contract. In these cases, the subgrade material must be in the proper cross section to insure that adequate depth of material is placed. This lime treated area then becomes the final subgrade. After proper curing time and recompaction of the lime subgrade, the subgrade must be trimmed to the final cross section. Lower areas are generally filled in with the trimmings of the higher areas, and some waste should be expected due to the normal expansion of the material.

(1) Fixed Form Method**.** The subgrade as excavated should be checked at regular intervals for grade, width and crown before placing the granular material. Grade stakes should be set at not over 50 foot intervals to the elevation and at the location agreed to by the Contractor and the Inspector.

(2) Slipform Method**.** The trimming will be accomplished by automatically controlled equipment operating from a string line set to a predetermined height above either the edge of slab or other reference point and to a predetermined offset. The height and offset must be agreed upon by the Contractor's Superintendent, Survey Party Chief, and Project Manager. As the automatic trimmer or grader moves down the project, constant checking behind the trimmer or grader should be done in a joint effort between the Contractor and the inspection personnel.

b. Preparing the Subbase

The rolling of the subbase should be closely watched at all times. If any soft areas show up, the unstable material should be removed. The new material used to repair the soft area should meet the Standard Specifications for subgrade material up to the level of the bottom of the subbase and for subbase material above that level. All the material should be moist enough to be easily compacted. It must be put back in layers and each layer must be compacted. When the area has been filled, the subbase should be given some extra rolling to make sure that it is firm and that all the soft material has been completely removed. If the subbase material has been compacted properly and the density has not been lost, it will give firm, uniform support. If the subbase material becomes contaminated from any cause, such as by mud tracked on by trucks or

washed onto the subbase during a rain, the contaminated material must be removed and replaced with material which meets the specification requirements.

c. Fine Grading

(1) Fixed Form Method**.** Fine grading is accomplished by the use of a Subgrade Planer, which trims the subbase with a continuous cutting edge to approximately final grade. Then, the loosened material is planed off and deposited outside the forms. The strike-off board is adjustable and must be set to proper crown and grade by the Contractor, and checked by the Inspector with a string-line before the subgrader is used. After the subgrade is cut to rough crown and grade, a Tail Grader, consisting of adjustable blades secured to a heavy beam frame which is mounted on flanged wheels, is pulled along the forms to cut the final crown and grade. If the checks indicate high or low grade, the Contractor or his representative at the site of the work shall be so advised.

The actual adjustment of the Tail Grader to produce a pavement of the required thickness, shall be done by the Contractor and not the Inspector, so that the Contractor, will be responsible for any thin pavement or overrun of concrete. Adjusting the Tail Grader is the Contractor's responsibility; checking the grade behind the Tail Grader is the Inspector's responsibility. After the Tail Grader passes over the grade, the excess subbase material left along the inside of the form must be removed. The trimming of narrow or irregular areas may be accomplished using other conventional methods. After final shaping of the subbase, a steel roller should be used.

Periodic checking should be done by measuring down to the subbase from a taut string or wire across the forms (See figure IV-1). The subbase thickness shall be checked and the thickness recorded at a minimum rate of one per each traffic lane for each 500 linear feet of the project. The subbase should be uniformly moist, but not muddy, at the time the concrete is placed.

FIGURE IV-1
MEASUREMENTS FOR CHECKING SCREED AND SUBGRADE ON UNIFORM PAVEMENT FROM A STRING STRETCHED ACROSS TOPS OF FORMS

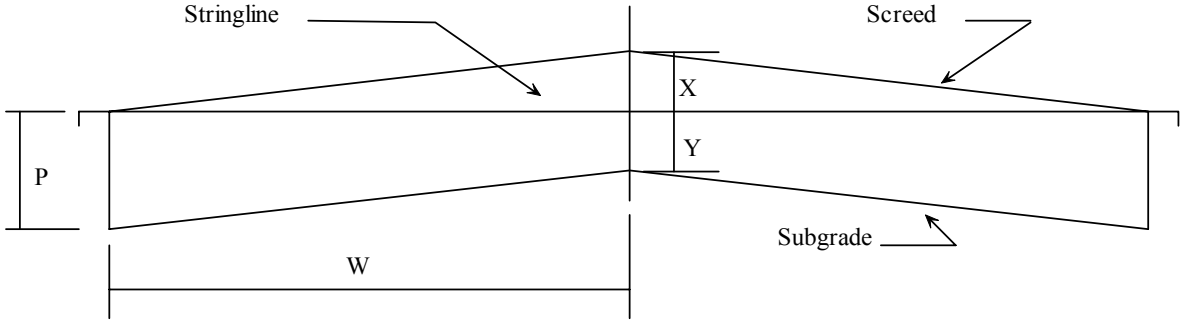

$$X = (W - H)(S)$$
$$Y = P - X$$

WHERE DIMENSION:
S = Slope per Foot in Inches
P = Pavement Thickness in Inches
W = Width of Pavement from Centerline to Edge in Feet
H = Horizontal Distance from Centerline to Check Point in Feet

X = Vertical Distance from Stringline up to Screed in Inches
Y = Vertical Distance from Stringline down to Subgrade in Inches

The Inspector must require the Contractor to keep the subgrade well drained at all times. Special attention must be given to this drainage in times of rain. Storing or stockpiling of materials on the subgrade will not be allowed.

(2) Slipform Method. Fine grading for the slipform method will follow the procedures outlined under Subgrade Trimming for the Slipform Method. See 4.04.07a.(2).

d. Forms and Form Setting

Forms are a continual source of trouble because they serve as tracks for all of the paving equipment in addition to serving as forms for the concrete. Since developments in paving equipment have given us more and heavier equipment, the forms play an increasingly important role in the construction of smooth pavements. The forms should be continually inspected to see that they comply with the requirements of the Standard Specifications. Insure that the forms have the proper dimensions and that they are straight and true. Also, check that the connecting devices and wedges function properly, and that the form pins are of sufficient length to insure rigid forms. It is extremely important that forms be set in such a manner as to prevent the forms from settling.

The first time the forms are set on a project they should be straightedged and inspected individually. Forms which are distorted more than specification allowances shall be rejected. Forms which are rejected should be marked conspicuously and removed from the work so that there will be no chance of moving them ahead and using them again. With the heavy equipment in use, all forms must be in perfect condition. This is a continuing job of inspecting forms, not just once at the beginning of the job.

Forms should be thoroughly cleaned and oiled each time they are used.

Care should be exercised in cutting the trench for the forms. The trench should be cut slightly shallow and trimmed to the required grade rather than cut below grade and filled with loose material. Blocking up the forms with loose material, bricks, blocks, etc., is not allowed. If it is necessary to use loose material to bring the trench up to the required elevation, the loose material shall be moistened and thoroughly compacted before the forms are placed.

Under present paving methods, the forms must support heavy loads, and are also subject to lateral forces imparted by the finishing equipment. It is therefore important that the foundation is thoroughly compacted, and uniform support is provided for the full length and width of the form base. After the forms have been set, the material under the forms must be thoroughly tamped, either with a mechanical tamper or a suitable hand tamper, under the face and back of the form. Sufficient subbase material should be available at the tampers to insure compaction. Probing with a steel pin readily discloses how effectively this has been done. Guard against excessive tamping in one spot, as this has a tendency to raise the form above the true grade. The principal point of inspection is to see that the subbase material is not excessively loosened under the form-line, as form setters much prefer to shovel loose material under the form rather than the harder work of cutting out the compacted material.

The foundation under forms which were placed prior to rain, should be checked for stability. Careful probing underneath the forms will disclose whether the material is firm enough to prevent settlement under the heavy equipment. Instances of deficient depth pavement have been attributed to this condition.

Use stringlines to establish a smooth grade on approaches to bridges, railroad grade crossings or adjacent pavements. Approximately 20 to 25 feet of the approach nearest the structure or crossing to be met, should be on the same plane as the structure to insure a smooth riding approach. When setting forms for pavement underneath a structure, the required vertical clearance above the pavement should be checked. The grade of the forms must be checked by eye to see that there are no humps or dips. The Inspector must determine if humps in the forms are due to a high place in the grade or low places on each side of the hump. Do not allow forms to be raised if the high form is due to a hump in the form grade. The high spot should be cut down.

A stringline should be stretched across a gap in the forms and the subbase fine graded with compacted material to reset the form to the proper grade.

Finally, check to see that all form pins are driven below the top rail elevation, and that the locks are tight on all stake pockets. Forms shall be staked into place with not less than 3 pins for each 10 foot section. A pin shall be placed at each side of every joint. A smooth riding job starts with a smooth and secure form-line.

e. Checking Forms for Alignment and Grade

After the forms are set, the Inspector must check them. They must be plumb and to line and grade on both sides of the lane. Line can be checked by measurement of the offset distance from the fine grade stakes and by sighting along the forms. Then, the distance between opposite forms must be measured with a steel tape. The elevation of the top of the forms should be checked to make sure that it is the same as the grade staked. The forms should also be checked with a straight-edge across joints.

<u>The checking of the forms is a most important part of the construction inspection of Paving by the fixed form method. The pavement cannot be built to the proper line and grade unless the forms are set right.</u>

f. Transverse Expansion Joints

Expansion joints are used at bridge approaches and as specified in urban construction. A great many types of expansion joints have been used in the past and their spacing and the methods of installation have varied greatly. Plans will need to be checked for each project to determine type of expansion joint and filler to be used. All expansion joint assemblies shall be set and checked before placing of the concrete.

The purpose of a load-transfer device is to reinforce the joint, which is the weakest part of a pavement, and at the same time permit movement to take place due to expansion and contraction of the slab. It is essential that all dowel bars be parallel to the center line of the pavement and also parallel to the surface of the concrete. One end of the dowel bar shall be coated as specified and thoroughly, but not excessively, greased to break the bond between the bar and the concrete. NOTE: Greasing should be complete and include the end of the rod. Greasing the dowel bars after they are in place usually results in a coating of grease on the joint assembly each side of the dowel bar. This decreases bond between the concrete and the dowel bars, and weakens the pavement adjacent to the joint. This defect may be eliminated by greasing the bars immediately before they are inserted into the installation device. The expansion caps should be placed on the greased end of the bars. Be sure that the caps are not driven past the stop which will allow ample room for expansion. The joint assembly must be held firmly in

place and be at right angles to the forms or reference line (along the radius when on a curve). Sufficient metal stakes must be provided to stake the joint assembly securely to the subgrade.

g. Transverse Contraction Joints

Transverse contraction joints spacing are to be as shown on the plans. Contraction joints are installed in nearly the same way as transverse expansion joints. One end of each dowel must be greased. Nose caps are not required but there must not be any burrs on the coated end of the dowel.

The exact location of each dowel assembly must be carefully marked for each contraction joint so that the saw cut is made across the center of the dowel bars.

h. Checking Alignment of Transverse Joints

(1) Fixed Form Method. An easy way to find if a joint has been installed at a right angle (or on a true radius if on a curve) is shown in Figure IV-2.

(2) Slipform Method. Joint alignment using the slipform method may be checked as in the form method by using the reference string line in lieu of the form line.

i. Longitudinal Joints

Requirements for longitudinal joints are given in the Standard Specifications, and details of construction are shown on the Standard Plans.

Longitudinal tie bars should either be placed mechanically or supported securely with bar chairs driven into the subgrade. When bar chairs are used it may be necessary to use 3 chairs for each bar instead of two. When the bars are placed mechanically, they should be placed at the proper spacing and to the proper depth, after the first pass of the concrete spreader and before the mesh reinforcement is placed. Care should be taken to see that the tie bars remain in their proper position during subsequent placing of the mesh and the remaining course of concrete.

All tie bars and dowel bars, unless mechanically placed, shall be placed prior to placing the concrete. Continuous vigilance on the part of the Inspector is necessary to see that the steel is properly placed and remains in place as the paving operations proceed.

FIGURE IV-2

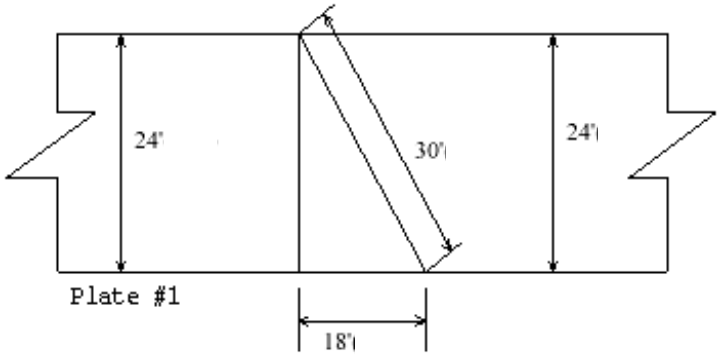

With the paving form on a tangent, a good method of squaring baskets is shown in Plate #1.
Using the right angle triangle dimensions of 4 feet , 3 feet & 5 feet, divide the roadway width by the altitude 4 feet. The results are multiplied by the base 3 feet and the hypotenuse 5 feet.

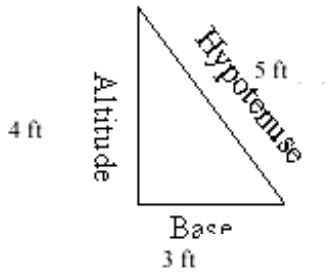

Example:

24 ft ÷ 4 ft or Altitude (a) = 6
6 x 3 ft or Base (b) = 18 ft
6 x 5 ft or Hypotenuse (h) = 30 ft

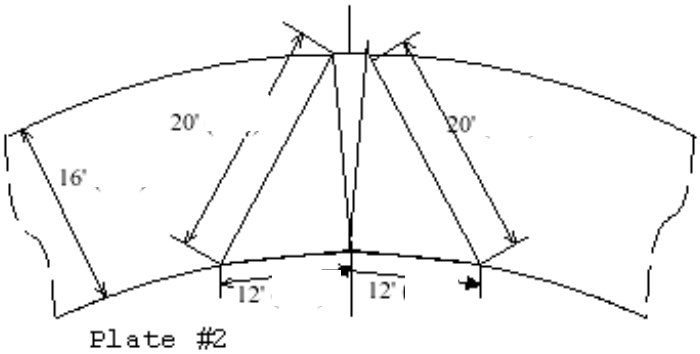

With the paving forms on a curve, a good method of squaring the basket is shown in Plate #2.
In this case, the right angle triangle is projected in both directions. The difference between the vertex of the two right angle triangles is split to find the true right angle.

j. Reinforcement for Approach Slabs to Structures

(1) Fixed Form Method. Additional reinforcement is required for the pavement or approach slabs, next to bridges and other rigid structures. Details are shown on the standard plans. The reinforcing steel must be clean and tightly fastened together by wire ties so they will not move when the concrete is placed. The reinforcing bar assembly should be held at the proper elevations by steel supports or bolsters. Sometimes it is necessary to true up the subgrade, reset some forms, and place the steel and joints after the paver has moved from the shoulder of the road to the bridge floor. This creates a confused and congested condition which is conducive to poor workmanship. The Inspector should insist that the subgrade at these locations be properly reshaped that the double reinforcement be placed at the proper elevation both above the subgrade and below the surface, and that it is properly spaced and tied, and the joints are properly constructed. Bar chairs and spacers are necessary to hold the double bar reinforcement in place and shall be placed in its proper position before the concrete is placed. When properly

constructed, this type of approach should eliminate a large amount of maintenance at these locations.

(2) Slip Form Method. On Slip Form projects, the approach slab is usually constructed using the Fixed Form Method. However, with proper ramps and stringline control, slip form pavers can pave approach slabs.

k.Control of the Mixed Concrete

The Inspector shall see that the concrete has the proper consistency within the limits set by the Contract Documents. They shall run frequent slump tests, and when they find it necessary to change the consistency, an adjustment in the mix shall be made. The total water in the mix allowed by the Contract Documents includes the water in the aggregate. The consistency of the concrete is extremely important as the strength and durability are greatly reduced by the use of excess water. Concrete of proper consistency, uniform throughout the day's run, will do more to secure a smooth, durable surface than any other factor entering into the construction. The consistency is measured by the slump test and is reported in inches of slump. The maximum allowable slump is noted in the Contract Documents.

The Contract Documents may require the use of an admixture to produce air-entrained concrete. Variations in concrete temperature, aggregate gradation, consistency, mixing equipment and other factors, can cause fluctuations in the air content. The Inspector must run frequent air tests on the concrete to maintain uniformity. Constant surveillance of all operations is necessary to insure proper air content throughout the entire depth of concrete.

When the concrete is delivered from a central mixer or a transit mixer, the final acceptance or rejection lies at the paver. With Slip Form paving, a slump of 1 inch or less usually works best and will hold a good edge.

l. Spreading Concrete

(1) Fixed Form Method**.** The spreader distributes and strikes off the correct amount of concrete so that the pavement reinforcement can be placed at the proper elevation. The screed must be adjustable so that it can be raised over the prepositioned load transfer baskets, when required, so that they are not disturbed. The speed of the machine is adjusted to the amount of concrete placed.

The concrete spreader, which will spread the concrete between the forms, should be inspected to make sure that the gauges, which show the elevations of the spreading device and the strike-off, read zero when the lower edge of the strike-off plate, immediately behind the spreading device, is at the level of the top of the forms. This can be checked by means of a wire or string-line stretched across the tops of opposite forms.

The Standard Specifications require that spreading of concrete be accomplished with a mechanical spreader. The screeds or strike-off of the spreader should be set to conform with the approximate cross section of the crown, and to feed enough concrete under the strike-off to furnish material for the finishing operations.

A uniform pattern of distribution in discharging concrete on the subgrade ahead of the spreading equipment is essential for efficient spreading. The paver's spreader bucket is best discharged while in motion, resulting in a partial spread of the concrete. Dumping in piles results in uneven consolidation, differential subsidence, and affects spreading efficiency. The distribution pattern should be shifted on super-elevated sections so that a greater amount of concrete is placed at the higher side of the section. From all standpoints other than workability,

too much water is detrimental to the concrete. If a particularly wet batch is being discharged from the truck into the spreader bucket, there is a tendency for the mortar to flow to the sides of the discharge chute with the coarse aggregate in the center, resulting in an accumulation of the larger stones on one side of the concrete bucket. Such wet batches should be rejected and the Contractor should not be allowed to place it within the forms, not even on the bottom, as the excess water will bleed up through the slab and cause eventual subsidence.

The Inspector should see that the spreader operator spreads the concrete out uniformly to a depth a little greater than the required depth. The concrete should not be dumped in a high pile and then spread. When a hopper type spreader is used, the hopper should be partially filled at all times for its full width, as it moves ahead to spread the concrete. Windrowing or piling of the concrete is not permitted.

On the first pass of the spreader, the concrete should be struck off at the elevation of the mesh, and the vibrators should be used to consolidate the concrete. The setting of this elevation is very important as it is on this pass that the concrete is struck off to provide a bed for the paving mesh. If necessary, a second pass on this lift shall be made to fill all low places to give support to the mesh over its entire area. No voids or pockets should be permitted in this layer so as to leave a pocket to be bridged over by the reinforcing. The second pass of the spreader should strike off the concrete to the proper crown and at an elevation to allow for the consolidation and finishing of the concrete.

Special care is required in spreading over and across transverse joints to be sure that the joint is not disturbed. The strike-off should be lifted well above the joint for some distance on each side. This makes a certain amount of hand leveling and vibrating at the joint necessary to insure that the mesh on each side of the joint is in its proper position. Consolidation against and along the full length and on both sides of all joint assemblies shall be attained by hand operated spud type internal vibrators inserted in the concrete.

When the spud vibrator is used, a worker should leave the spud in one place between 5 to 15 seconds. If vibrated over 15 seconds in one place, the concrete will become so liquid that the large stones will sink to the bottom. There will be too much mortar on top, which will create a weak area in the pavement. The mortar shrinks more than the rest of the concrete, and this uneven shrinkage may cause a crack. Vibrators are to be used only to consolidate the concrete; they must never be used to move or spread concrete.

Extreme care is necessary in placing the concrete at the joints so that the joints will not be disturbed. The concrete shall be carefully hand vibrated at the joints, and when a joint is found to be disturbed, the concrete around the joint shall be removed. The joint shall be straightened or reset to its true position and the concrete carefully replaced. It is particularly important that uniform concrete with no segregation be placed on both sides of each joint assembly. This operation must be inspected carefully to make sure the dowels are not moved, and the dowel caps at the expansion joints are not knocked off or damaged. The operator should never dump the batch where it will run against a joint. The bucket shall be brought to a stop over the joint to deposit the concrete on each side of the joint simultaneously. If any method of discharging the bucket causes distortion of any joints, the concrete shall be dumped away from the joint and shoveled against the joint in a manner to prevent distortion.

(2) Slip Form Method. The concrete spreader must be self-propelled with an adjustable strike-off capable of placing the required thickness of concrete and adjustable slip-forms for placing the required width of pavement. The spreader will use the string-line, used for subgrade trimming, as a guide for alignment only. The depth of concrete is controlled by moving

uniformly up from the trimmed subgrade. The spreader should uniformly distribute the concrete over the subgrade, and the concrete should be void of cavities and pockets.

m. Placing Wire Mesh and Dowel Bars

The reinforcement must be fully supported over its entire area. This pass of the spreader should continue for a distance well past the end of the sheet of mesh. The mesh is then placed, lapped and tied as noted in the Contract Documents. Frequent checks on the depth of the mesh behind the finishing operations may require adjustments in the depth of the strike off. These checks may be made with a rule measuring from the surface of the concrete to the top of the mesh at intervals across the crown of the pavement, and recorded in the project records.

(1) Single Lift Method. Approximately 1 inch more concrete than called for on the plans, should be placed on the subbase with the spreader as described above. The paving mesh is placed on the fresh concrete, lapped and tied, then depressed into the fresh concrete to the depth indicated on the plans. This is done mechanically just ahead of the Slip Form paver. Care is required in order to insure that mesh is placed and maintained in the proper location.

(2) Two Lift Method. Approximately one half the thickness, plus or minus 1 inch, of fresh concrete is placed on the subbase using the spreader described above. Paving mesh is then placed on the concrete. Care must be taken when placing the mesh for alignment and joints. A second spreader placing the remaining thickness on the previously placed fresh concrete and wire mesh is then used. The tying of the paving mesh is done just prior to placing the second lift of concrete. Both spreaders are controlled off the same string-line as used for trimming the subbase. Note the string-line is used for alignment only, and depth is controlled from the top of the subbase.

Paving Mesh and Dowel Bars (both methods). Care must be taken in placing wire mesh and dowel bars. Mesh generally is placed and secured manually. Mesh shall be placed in accordance with the Contract Documents. Care must be taken to avoid walking on dowel and/or tie bars while placing the mesh.

When mechanical mesh installers are used, the reinforcing mesh is placed on the concrete after it has been struck off to its approximate final position. It is pressed into the concrete to the required depth by a tamping or vibratory action exerted by a grid or a system of parallel bars acting on tied reinforcing mesh. Care must be taken to avoid any movement of this mesh. The mesh placer has a tendency to move the mesh forward over the center of the next contraction joint. It should be assured that the mesh does not creep ahead during the finishing operations. Never allow the mesh to extend through a transverse joint.

Dowel bars (for transverse joints) may either be placed manually or by a mechanical attachment to the paver. Tie bars (for longitudinal joints) may be either placed manually (on “p” stakes) or by a mechanical attachment to the paver.

Correct location of both the tie bars and dowel bars is vitally important to insure that the pavement and joints work properly and as designed. Standard plan sheets show the deviations allowed in placement of the bars. Any variations from these limits should not be allowed.

Verification of the location of the bars should be made and documented during concrete placement and also after the concrete is hardened. Probing the concrete to verify depth and using a pachometer on the hardened concrete are two methods that can be used.

n. Consolidation and Machine Finishing

(1) Fixed Form Method.

(a) Finishing Machines. Finishing machines are used to give the final cross section and finish to a pavement, and by the action of its screeds to compact and consolidate the concrete. It is the Contractor's obligation to maintain his paving equipment in a condition suitable to produce work which meets specification requirements. The Inspector's job is to see that the equipment is adequate and in condition to produce satisfactory work. Regardless of how recently the equipment was used on other work, the Inspector should satisfy himself that it is in a condition to perform satisfactorily and to produce the quality of work required by the Standard Specifications.

After paving is underway, more adjusting may be required. By knowing what the settings were initially, much of the guesswork can be eliminated in subsequent adjustments.

The sections of a screed which slide across the forms during its transverse motion are subject to a great amount of wear. They should be examined carefully prior to paving and if worn excessively, should be replaced or reversed prior to any screed adjustments. As paving progresses they should be checked for wear periodically and replaced when distortion of the pavement cross section-occurs.

The final pass with a machine using a transverse screed should be delayed as long as practicable to permit some settlement in the concrete to take place. Unless every batch is uniform, the settlement in concrete is non-uniform and early finishing results in irregular settlement, which causes poor riding qualities in the pavement.

If the screed adjustments have been carefully made as explained previously, each screed should carry forward a smaller quantity ("roll") of concrete than the one preceding. Due to the mix which is being used, the initial adjustments may not produce the desired results and more adjusting may be required to fit the mix.

The relation of forward speeds with the action of the transverse screed is important. With stiff mixes, the screed speed should be fairly rapid and lengthy, and the forward speed should be relatively slow. With more workable mixes, the screed action should be decreased in both speed and length, and the forward speed increased accordingly. Any machine which is incapable of being adjusted to overcome a forward motion that is jerky and hesitant and causes excess racking of the forms should not be approved.

(b) Longitudinal Finishing. The longitudinal finisher has a screed or float set parallel to the pavement which operates across the slab as the machine is moving forward. When operating properly, the float should carry a slight roll of mortar which diminishes toward the rear. If it cuts, or if additional concrete is required to be added, it means that some machine in the finishing train is out of adjustment or is being improperly operated and corrections should be made. It may be the finishing machine, the longitudinal finisher or both that need adjusting. A sloppy laitance carried by the finisher is an indication that the operation is being performed too early. Precise control and attention to varying conditions are necessary if acceptable riding surfaces are to be obtained. The time at which the longitudinal finishing is done is very important. The concrete is continually settling, because of loss of water and air, until it has started to harden. If it is finished too soon, more settlement will take place. Since this settlement is never uniform, an uneven riding surface will result.

Two types of float finishers are presently in use. One has a screed and a float pan and is attached to and towed by a finishing machine. The satisfactory performance of this machine depends largely on the action of the finishing machine. For best results, it must move forward at

a steady uniform speed. The second type is a self-propelled unit equipped with a conventional screed in front with a screed and float pan in the rear. In each case, the rear screed and float pan is suspended from the frame and has no contact with the forms. The suspended screed shapes the final surface, and the float pan irons out minor irregularities. A very precise correlation in adjustment is required. A slight roll should be carried by the screed, and the float pan should rest on the surface with just enough pressure to iron the surface without cutting. The timing of this operation, as with the longitudinal finisher, should be closely controlled.

In case of equipment breakdowns or unavoidable delays when the finishing is hampered, the addition of a slight amount of water above the surface as an aid in finishing is permissible. If used, the spray shall be applied above the surface in a fog spray. The use of the spray is not considered as good practice, but is the lesser of two evils when difficult conditions exist, and is to be used sparingly and only when absolutely necessary.

The Inspector should check the crown behind the longitudinal finisher at frequent intervals to insure that the proper crown is being maintained. Constant coordination in the operation and adjustments of the spreader, finishing machine and longitudinal finisher is necessary to see that each one may carry a roll of material ahead of its screeds, to produce the proper cross section and riding surface of the slab, without undue waste of material. On some occasions, such as on curves and transitions, and in some cases on crowned sections, the concrete will have a tendency to slump against or away from the forms, causing either a ridge or depression or both. If this condition cannot be corrected by adjusting the slump of the concrete, the longitudinal finisher shall be operated only one way (uphill) or only from the form line to the center. Frequent checks of the crown of the pavement, whether on tangents, transitions or curves, should be made to insure that the surface is finished to the correct section and free from ridges or depressions caused by slumping of the concrete.

(c) Mechanical Finishing of Transitions. Curve transitions shall be laid out, formed and finished to the lines, grade and cross section indicated in the Contract Documents, or as indicated by the best engineering practice. The amount of superelevation will be shown in the Contract Documents.

All finishing machines and longitudinal finishers have a mechanical device for bringing the screeds to a plane surface from the crowned surface. These adjusting devices operate on the principle of dividing the portion of the transition, in which it is necessary to eliminate the crown into an even number of increments, and to eliminate the crown in the same number of adjustments of the machine. Different machines have slightly different procedures for eliminating crown through transitions. The instruction manual for each should be consulted. The proper operation of the longitudinal finisher through these areas is of utmost importance in producing good riding surfaces.

The Contract Documents will indicate a plane surface on all curves that are super-elevated. Experience has proven that more satisfactory results are obtained if approximately ¼ inch crown is retained at the time of finishing. Slight slumping of the concrete on surfaces finished to a plane will cause minor depressions and ridges adjacent to the forms and on curves with slight superelevation, water may be impounded. Retaining a slight crown usually eliminates this condition without materially affecting the riding surface.

(d) Consolidation. In the construction of portland cement concrete pavement, the settlement and consolidation of the concrete is usually accomplished by the use of mechanical equipment as shown in Division 150 of the Standard Specifications.

The vibratory equipment for general consolidation of the pavement concrete is of the internal spud type or the surface pan type. When used on the top course of reinforced pavement, the angle of the vibrator with the surface plane of the pavement should be small enough to prevent contact with the mesh reinforcement. The hand operated internal spud vibrator can be used to good advantage in consolidating the concrete at locations where the use of the finishing machine is restricted, such as connections to a bridge deck, around manholes, at transverse joint dowels assemblies or along forms. Honeycombed concrete is objectionable at these locations, and the proper and judicious use of a vibrator can help to secure thorough consolidation at these points.

(2) Slipform Method. A slip form paver is a self-propelled machine with trailing forms which move with the paver. The following operations are done through the machine: laying and shaping, consolidating through vibrating and tamping, forming and controlling width, thickness, alignment and riding surfaces. These operations are all done simultaneously and continuously throughout the time the paver is in operation. The paver is controlled for alignment by the same stringline used for the trimming. The final depth of finished concrete is controlled by the top of the subgrade, making the checking of the subgrade one of the most important operations of the slip form paving.

Items to be checked by Inspector for Slip Form Paving Method are:

- Subgrade and Subbase Trimming
  - String-line set at reference point agreed to by Contractor's Superintendent, Survey Party Chief and Inspector.
  - String should be relatively free of knots to avoid the sensors from being knocked off stringline.
  - Superelevated sections and transitions should be checked for final placement.
  - Surface should be as true as possible, as this will affect the entire riding quality of the project.
  - Drainage should be checked to avoid any erosion of subgrade or subbase.
- Concrete Spreader or Spreaders
  - Be sure all conduit, turnouts, transitions, tie-ins and contraction joints are marked outside the slab area.
  - Check and set the adjustable strike-off location above the subbase.
  - Have forward speed set as nearly as possible to continually move, avoiding long stops.
  - Overall cleanliness of equipment, free of old concrete buildup.
- Mesh Placement and Dowel Bars
  - Location both laterally and vertically.
  - Mesh laps should be in direction of the slip form paver, or they tend to come up.
  - The required number of ties are made across the mesh.
  - Dowel bars placed behind the first spreader or physically set prior to spreading any concrete.
- Slip Form Paver
  - Check screed for proper crown and trueness. This can be done with string-line and measuring the vertical offsets.

- Check that the first and second strike-off screed each will have a slight roll of concrete carried in front of the screed. There should be approximately 1/16 inch in elevation between these screeds.
- Check pan height above subgrade, pan should be tilted from front to back approximately 1/16 inch.
- An additional ¼ inch mid point crown should be set to take care of parabolic crown.
- Check width of side forms. These should be tapered from front to back. This will greatly help hold a true edge.
- Check all vibrators to be assured that they are not less than the minimum frequency (See Division 150 of the Standard Specifications). In addition, check location of vibrators for vertical location, they should not come into contact with the wire mesh.
- Check the stability of the arms holding the sensors, if extended to quite a length. Additional material may be required to keep these arms from moving.
- Make concrete depth checks and width checks to assure all pans and strike-off are staying in the proper location.
- Be sure Contractor has a supply of forms on hand to make repairs of edge fall-out locations.

o. Straightedging and Hand Floating

After the mechanical finishing is completed, but while the concrete is still plastic, minor irregularities and score marks may be removed with the straightedge and wasted over the forms. The straightedges should be rigid enough to scrape off high spots, if necessary, instead of merely riding over the surface. The straightedge shall be operated parallel to the pavement centerline starting at the center and progressing outward. Advancement shall be made in successive stages of not more than ½ the length of the straightedge. At the Contractor's option, this requirement may be waived when smoothness is to be determined by the profilograph. Straightedges should be periodically checked for trueness. Long handled floats may occasionally be necessary to close opened textured areas, but their use should be discouraged. If opened textured areas persist, it is an indication that deficiencies exist in the mix proportions and an effort should be made to correct it. Finishers must not be allowed to throw water on the surface of the pavement to make their work easier. Addition of water causes scaling and very rapid wearing away of the surface under traffic. Very frequently, small air voids appear on the surface. In an effort to remove them, the surface is over-manipulated which is more detrimental to the concrete surface than the air voids.

(1) Tube Finisher. This machine consists of a metal hollow tube, and cannot be constructed out of aluminum; it may have a fog moisture bar attachment, and a burlap drag bar.

This machine is mounted on wheels capable of either manual or automatic steering by sensors, and is a self-propelled machine. This machine is guided from the same stringline as the other pieces in the paving train.

This machine acts as a large trowel and as a straight-edge.

Prior to lowering the tube upon the slab surface, it must be positioned at an angle across the slab.

When the tube has been positioned at the desired angle to the slab, it is then lowered while the machine is moving forward at moderate speed. This prevents marking the slab surface when the tube is lowered. Care should be taken when the tube is lowered for the initial pass over the slab, and a specific section of the slab should be completely worked before moving to a new section. The condition of the slab should be noted to determine the length of the section to be worked.

The slab must be finished while the surface grout is fluid enough to be moved over the slab by the tube.

Tube angle should be reversed each time machine direction is changed. The number of passes will depend on the initial condition of the slab surface. On the final pass in the forward direction, the burlap drag bar shall be lowered, and the tube placed at such an angle that the tube end extends approximately 6 inches over the edge of the slab. This permits any residue remaining on the slab surface to be discharged over the edge of the pavement.

The tube finisher may be operated with two 20 foot floating tubes for crowned surfaces. One tube is located forward of the other so that the tubes overlap approximately 2 feet at the center of the machine.

These tubes ride upon the surface of the slab under their own weight.

On the last forward pass, a burlap drag or other roughing material, (attached to the back of the tube float) will be lowered to apply the final finish prior to the transverse grooving operation as shown in the Contract Documents.

(1) Miscellaneous Items of concern.

(a) Hand Finishing. The only occasions that hand finishing methods may be employed are to complete finishing at the construction joint, when mechanical equipment breaks down, or when constructing irregular sections or narrow widths, where mechanical methods cannot be used.

Intersections and other irregular areas do not lend themselves to most types of mechanical equipment. To insure proper thickness of the slab, adequate drainage, crown, etc., steel stakes should be set and graded to the surface of the slab at approximately 10 foot intervals on the control lines. Usually, these stakes are set on the center line, on radial lines and in the flow line of the gutters. Forms shall be properly staked, aligned and graded to the surface of the slab. From these forms and stakes, stringlines may be stretched, and these along with straightedges, may be used to prepare the subgrade, strike the concrete to the steel elevation and to finish the surface. Gutters should be checked with a straightedge and spirit level to make sure they drain, and the crown should be checked for flat spots which impair drainage or riding qualities. It is essential that the same degree of accuracy be obtained in the placement and finishing of concrete at these locations, as though machine methods were being used.

On narrow, regular sections, such as widening, short screeds should be constructed by the Contractor for cutting the fine grade, striking off the concrete at the mesh elevation, and for shaping the surface. These screeds should be pulled by hand or by a mechanical device. Longitudinal finishing may be done by hand. The accuracy and the steps in the construction of pavement in this manner should be the same as outlined for mechanical finishing.

(b) Joints. All expansion, contraction and longitudinal joints shall conform to the details shown on the plans for the joint required. Where alternate types are included in the design, the Contractor may choose the type to be used. The joints shall be installed at the spacing and location shown in the Contract Documents.

For obvious reasons, the joints are the weakest part of the pavement as is evidenced by corner breaks, spalled joints, rough joints, etc. They are responsible for a large portion of the maintenance cost of concrete pavement. For these reasons, it is essential that the utmost care be taken in the installation of joints to see that they are properly installed, well consolidated, straightedged for riding qualities, edged, cleaned and filled.

(c) Expansion Joints. The expansion joint assembly was discussed previously, and the importance of its proper installation ahead of concreting operations was stressed. Care should be exercised in passing the finishing equipment over the joint, so that its various parts will remain in their exact position. Careful placing of the concrete is necessary around the joint to properly consolidate the concrete around the dowel bars and installation device and to eliminate honeycomb. The concrete around expansion joints shall be vibrated with an internal spud vibrator.

After the longitudinal finisher has passed over the joint, and when the concrete has stiffened sufficiently to prevent slumping, the concrete over the joint filler board shall be removed and the joint edged. The plans call for a relatively short radius on the edge of the joints. The Inspector should check the edgers to see that the proper radius is used. The longer the radius of the edger, the wider is the joint, and wide joints detract from the riding qualities of the pavement. If other types of expansion joints are specified or permitted, they shall receive the same careful attention and installation as the one herein discussed.

(d) Longitudinal Joints. Longitudinal joints shall be sawed, cleaned and sealed in the same manner as will be described for contraction joints. It will be necessary that the tie bars, when required, be securely staked to the subgrade in their proper position, by the use of bar chairs before the concrete is placed, or the bars may be placed in the fresh concrete mechanically. When bar chairs are used, they shall be stable and shall be oriented in a manner to insure maximum bracing against the direction of machine travel.

(e) Contraction Joints. The location of all contraction joints shall be plainly marked in the fresh concrete after finishing operations are completed. No mesh shall extend through the contraction joints. When sawing the contraction joints, the Inspector's chief concern is to be sure that they are cut at the proper angle to center line, have the proper depth, are vertical and true to line, and are cut before premature, erratic cracking occurs. This will require close inspection, but with the use of abrasive blades, these joints may be cut early enough that uncontrolled erratic cracking will be prevented.

(f) Construction Joints. Construction joints shall be made perpendicular to the centerline of the pavement in accordance with the Contract Documents whenever paving operations are discontinued for the day or for any other reason. The joint shall be formed by placing a header board in a vertical position across the slab and finishing the concrete to the board, or at the option of the Contractor, he may "pave by" the joint location and saw the construction joint when the concrete has hardened.

(g) Edge Curb. The back forms for edge curb constructed monolithically with concrete pavement, shall be of steel. They shall fasten securely to the pavement form, shall be of the proper dimension, and shall be brought to the proper alignment. The concrete shall be placed and consolidated, and then shaped with a steel tool to the section shown in the Contract Documents.

In order to obtain the best bond between the pavement and the curb, the forms should be set, and the edge curb constructed as soon as possible after the pavement finishing operations have been completed. The pavement area to be covered shall be cleaned of all laitance and

thoroughly roughened before placing the concrete for the curb. If the Inspector finds that the placing of the concrete for the monolithic curb is delayed excessively, a keyway should be constructed in the pavement at the front toe of the curb and vertical tie bars inserted in the pavement. This construction requires constant inspection to assure the maximum bond between the pavement and the curb.

The curb shall be shaped to its proper contour and finished with a steel trowel. The Inspector should check closely the lines being obtained by the finishers to insure well-shaped curbs free from bulges, depressed tops and unsightly lines. After the curb has been finished, the glaze should be removed by lightly brushing the surface with a soft, damp brush.

(h) Stationing. Survey station numbers shall be marked in the pavement surface while the concrete is plastic. These station numbers shall be at 500 foot intervals, and shall be placed in a transverse position about 6 inches from the right edge of the pavement, as indicated in the following diagram:

FIGURE IV-3

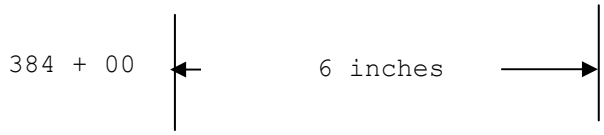

Special dies are furnished for this purpose and are available through the District Office. An aligning device should be used so the marking will produce a neat appearance. Stakes shall be set at the even fifth and tenth stations throughout the project and the Construction Engineer's forces shall place the marker. This applies to all pavement projects.

p. Protection and Curing

(1) Curing. Curing is essentially the process whereby the amount of water necessary for the proper hydration of the concrete is prevented from evaporating. It is an important element in the production of durable concrete. The hydration process continues for an indefinite time, but the critical period falls within 96 hours after placing. When concrete sets, it has many very small holes and channels which are filled with the mixing water. If it is kept moist, the water acts on the cement to form a jelly-like substance called "gel", which partly fills these holes and channels, and binds the pieces of aggregate together. Any delay in starting curing, especially in hot, dry, and/or windy weather, can cause surface cracking of the concrete. Curing will normally be accomplished by either the "Damp Burlap Cure" or the "Membrane Cure."

(a) Damp Burlap Cure. As soon as the finished pavement can be covered without detrimental marring, damp burlap shall be placed on the surface and kept saturated during the curing period as required by the Standard Specifications.

The correct time for covering can usually be determined by lightly touching the concrete surface with the finger tips. If the concrete sticks to the finger tips and a definite depression is made, the concrete is a little too fresh to cover. If, on touching the concrete lightly, the surface shows no depression of consequence and only a light stain of cement and dampness shows on the finger tips, the slab shall be covered immediately. The burlap should be damp when it is applied. Placing dry burlap on the surface would draw moisture from the concrete and defeat the purpose of its application. Damp burlap also is much easier to place while the wind is blowing. After the damp burlap has been placed, it should be kept wet for the entire specified curing period.

Because curing is of great importance in obtaining high quality concrete (both durable and strong), the Inspector should check this operation at least once an hour during the day. Periodic checks should be made to determine if proper curing is maintained throughout the night, as it is possible that the burlap could dry out during the night. Periodic early morning checks would determine if adequate curing is maintained.

The curing must always take first priority. If there is not enough labor or enough water to take care of both the paving and the curing, the paving must be stopped until the curing is addressed. Arrangements must be made so that the curing is continued on holidays, or at any other time when paving is interrupted.

As a minimum, the Standard Specifications require that the curing be maintained for 4 days and the concrete has achieved a flexural strength of 375 psi. Since it may not be practical to keep burlap saturated continuously for a long time, other methods, such as polyethylene coverings, may be used for continued curing. The details of several methods are described in the Standard Specifications. In any case, the objective is to put as nearly an air-tight seal as possible over the exposed surfaces of the concrete, and to prevent the escape of water vapor. During the curing period, the concrete will gain strength rapidly if it is kept moist.

(b) Membrane Cure. When membrane curing is used, the entire covering should completely seal in the water vapor. The membrane material contains a solvent which evaporates quickly, and the type used for highway work contains a white colored pigment. The white color reflects the rays of the sun and reduces heating of the concrete. This reflection lowers the curing temperature and helps to prevent the escape of water vapor.

Before paving operations start, the Inspector should calculate the coverage of membrane material from a 55 gallon drum (be sure to include the edges of slab in calculation).

The surface of the concrete should be moist, but free from standing water when the membrane material is applied. If the surface is too dry, the solvent will be absorbed, and a tight membrane will not be formed. Membrane material must be applied uniformly, and at the rate called for by the Standard Specifications. The area covered by each drum of material should be measured to make sure that the proper amount is being used. For highway work, the material usually is applied by mechanical spraying machines in one application. When a hand sprayer is permitted, the curing material shall be applied at the same rate as with the mechanical spraying machines.

Check all nozzles on the sprayer frequently, and maintain a uniform spray across the entire slab surface and vertical edges. This spraying operation can proceed as soon as the free moisture has left the slab. If the slab is left exposed to the elements too long before spraying with curing membrane, hairline cracks will develop. If this occurs, cracks must be closed with a wood float or other approved methods, prior to spraying the curing membrane.

The white pigment in the curing compound remains in suspension for a relatively short time. To insure that a uniform coating of the desired reflecting qualities is provided, the material must be thoroughly agitated just prior to use and kept agitated during its application. When applied at the specified rate, the surface should present a uniformly white appearance without alternately light and dark bands. Frequent checks should be made to assure that the rate of application and coverage is satisfactory.

In any case, the membrane material must be applied evenly, and must form a continuous film that leaves no part of the concrete exposed. The sides of the slabs shall be sprayed with hand sprayers as soon as the forms have been removed and any honeycomb areas repaired. Care must be taken to cover the entire area.

After a satisfactory coating of membrane has been applied, it must be protected. Walking on the membrane, operating equipment on it, or doing anything else that might scrape or wear off the membrane, will break the film and let water vapor escape. Any area where the membrane has been damaged by rain, has been scuffed off or has pinholes, must be resprayed. A continuous film must be maintained at all times.

During the curing and aging period, traffic will not be permitted on the pavement, except as necessary for sawing the joints. Areas of the membrane disturbed during joint sawing operations, must be resprayed immediately.

q. Cold Weather Protection

Heat hastens and cold delays the hardening and strength gain of concrete. Therefore, Division 400 of the Standard Specifications stipulates the weather limitations. To protect and cure the concrete, an approved moisture barrier must first be placed in intimate contact with the surface of the concrete. On top of the moisture barrier, a blanketing material, such as straw, should be placed as an insulation to maintain temperature or higher as required by the Standard Specifications. The Inspector must make regular checks of the temperature of the concrete as measured on the surface to ascertain that proper curing temperatures are being maintained.

If it becomes necessary reasons to continue paving operations when air temperatures are below the specified minimum, and written permission has been obtained, the provisions of the Standard Specifications cover the procedure in detail. The Construction Engineer shall see that the materials are heated correctly, and that the desired temperature of the concrete is rigidly controlled and maintained throughout the curing period.

r. Final Stages

(1) Removal of Forms. The Standard Specifications require the side forms remain in place at least 12 hours after the concrete has been placed. The forms protect the green concrete and prevent the escape of moisture from the edges of the pavement during the important first part of the curing period. Form pins should not be removed, and forms should not be "loosened" until the end of the specified period.

When the forms are being removed, care must be taken never to pry against the slab or to throw pins, or sections of the forms, onto the new concrete. Form pins should be pulled with equipment that works outside the forms and does not put pressure on the edges of the slab. If forms have been properly cleaned and oiled, they should be easy to remove. In all cases, the forms must be pulled away from the edge of the slab without prying against the concrete.

(2) Surface Trueness. The smoothness of the pavement will be determined by using a 10 foot straightedge or by the profilograph test. Requirements for Pavement Trueness are described in Division 500 of the Standard Specifications.

Any rough areas of pavement that do not comply with specification tolerances, shall be corrected by the Contractor. Grinding or removal and replacement may be required to correct deficiencies.

(3) Joint Sawing. All joints shall be wet sawed and constructed as shown in the Contract Documents. Sawing of the joints shall be accomplished in two stages. The first stage shall be a relief cut approximately ⅛ inch wide and to the full joint depth at the proper location. Alternate methods for the first stage sawing are listed in the Standard Specifications. The second stage is widening of the relief joints. Contraction joints are to be sawed to the depth required for the full width of the slab in one continuous pass.

Longitudinal joints shall be sawed in as continuous an operation as practicable. A re-start usually causes irregularities in the saw cut.

Immediately after sawing the joint, the resulting slurry shall be completely removed from the joint and the immediate area by flushing with a jet of water under pressure, and by the use of other tools as necessary.

(4) Sealing Joints. Joints, sawed or formed, must be clean and the surface dry at the time of sealing. Sealing of joints with approved material, should be done prior to opening to any traffic.

Immediately prior to sealing, all joints are to be thoroughly cleaned and filled with approved material in accordance with the Contract Documents. It is extremely essential that the joints be clean and dry prior to filling.

(a)Poured Joint. If heated joint-sealing material is used, it shall be agitated to avoid localized overheating, and the temperature continually checked to assure compliance with manufacturer's recommended temperatures. Pouring of joints shall be done in such a manner that the material will not be spilled on the exposed surface of the concrete.

No artificial heating shall be permitted, if cold-poured joint compound is used. Field heating of this material will cause serious damage. Difficulty in handling this material because of too low a temperature is encountered only in the late fall and early spring. In case higher pouring temperatures are required, the material should be placed in a heated storage room and delivered to the project as needed.

(b) Preformed Elastomeric Compression Joint seals. These are to be installed according to the Contract Documents and Manufacturers' instructions.

(c) Pressure Relief Joints. Openings for the joint material should be formed or sawed as shown on the plans. The lubricant adhesive shall be used as recommended by the manufacturer.

Immediately prior to installation of the joint material, the joint shall be cleaned by sandblasting followed by an air blast to clean the joint faces.

The Engineer may approve pre-positioning of the 2 inch material if adequate means are taken to insure proper placement and retention, and if deformation of the material does not occur when the fresh concrete is placed against it.

The Contractor will use a foam spacer block beneath the 4 inch joint filler material to maintain the grade shown on the plans. The spacer block will be an easily compressed foam material shown on the plans and cut to fill the void beneath the joint filler as shown on the plans.

4.04.08 CORING PORTLAND CEMENT CONCRETE PAVEMENT OR BASE COURSE

Coring of newly constructed concrete pavement is required to determine that the construction conforms to the specified thickness. When possible, the coring should be complete prior to the opening of traffic. If the KDOT is to do the coring, the District Materials Engineer should be notified that the project will be ready for coring approximately 2 weeks before the completion of the project.

On projects where the Contractor is to core the pavement, he shall make arrangements to complete the coring prior to opening to traffic.

All cores shall be submitted to the Materials and Research Center.

4.05 BITUMINOUS SURFACE

4.05.01 GENERAL

Plant mix, also referred to as hot-mix bituminous concrete, is a mixture of mineral aggregate and bituminous binder heated and mixed in a central-mix plant. Plant mix is used extensively on various types of roads and streets, and when properly constructed serves satisfactory under heavy traffic volumes. It may be used as a base course, leveling course, surface course or resurfacing course placed on all types of prepared surfaces.

While several types of bituminous mixtures are in use, the methods of control are essentially the same for all types. In general, bituminous concrete is composed of a combination of various acceptable aggregates, specified by the contract, theoretically graded to progressively fill the voids and mixed with an asphalt cement to obtain the desired stability when placed on the roadway and handled in the proper manner.

4.05.02 MATERIALS

Aggregates, such as crushed stone, gravel, slag, manufactured lightweight aggregate, shell, sand, screenings and mineral filler, combined with asphalt cement are the basic materials used in preparing the types of bituminous mixture shown in the Contract Documents. For Hot Recycled Bituminous Construction, reclaimed asphalt pavement (RAP) and recycling agent are used in addition to the virgin aggregates. Mixtures used are based on availability of materials, traffic load and local subgrade or base materials. Sand is used in most mixtures, as it tends to lubricate the mix and decrease harshness that usually accompanies a total crushed material.

The application temperatures for the various types and grades of asphalt shall be in accordance with Division 600 of the Standard Specifications.

All materials shall conform to the requirements specified in the Materials Division of the Standard Specifications.

The selection of the types of aggregates, produced in Kansas, is greatly influenced by the location of the project. The standard policy of the department is to make best possible use of local materials by constantly studying, through research and practice, the construction capabilities of each type mixture that will function the very best at a minimum construction and maintenance cost.

4.05.03 DESIGN

Samples of aggregates to be used for the Bituminous Mixture specified in the Contract Documents will be taken by an authorized representative of the KDOT and submitted to the District Materials Engineer for quality tests. When this is approved and gradation determined on the aggregates, a theoretical proportion of two or more aggregates must be determined. There are several methods in which proportions may be determined: Graphic Calculated, Coordinate Graph and Cut and Try. Whichever method is used, the final combined gradations should be plotted on a gradation chart (sieve sizes against percentage retained) along with the specification limits. This provides a graphic picture of the position of the gradation line in reference to the specification limits.

Not less than 2 weeks prior to plant operation, the Contractor should submit his design job-mix gradation to the Construction Engineer with a copy to the District Materials Engineer. It is the responsibility of the Contractor to submit individual aggregates and/or RAP and bituminous materials to the District Materials Laboratory, where a Marshall test will be performed to determine the desired asphalt content on the combined material. Upon completion

of the Marshall test, the District Materials Engineer will submit a complete report of their findings to various sections of the KDOT, including the Construction Engineer's office under which the project is supervised. The report will include the Marshall property curves, the conditions under which the test was performed and a recommended asphalt content as prescribed by test procedures. The Marshall criteria is being used in Kansas primarily in ascertaining the asphalt content for a given mix on a given project, although some contracts include requirements as to Marshall density, stability, flow and voids. Marshall procedures are recommendations based on experience in the use of Marshall criteria along with studies in the performance of various bituminous mats in service and research studies by the Bureau of Materials and Research.

When actual job conditions require judicial action, the Construction Engineer certainly should take such action to remedy any deviation from these Marshall procedures. It should be understood that good jobs do not come from the laboratory alone. Good jobs and sound engineering are achieved by close correlation between the laboratory and job conditions.

If such conditions exist which warrant a change to the Marshall Mix Design, the Construction Engineer shall complete DOT Form 708 "Request for Change to Marshall Mix Design" and submit to the District Materials Engineer for approval.

4.05.04 PRE-CONSTRUCTION CONFERENCES

a. General. For Preconstruction Conference details see section 2.06 Preconstruction Conference of the Construction Manual.

b. Paving Procedures. Nothing is gained by operating the pavers at a greater output than the plant can produce. When the paver is operated at a fast speed for a few minutes and then forced to wait for trucks, the working parts of the paver cool-off and the remaining mix in the machine becomes stiff, and related problems arise. When the paver resumes operation with the next load of material, all of the resisting forces have increased, and the paver must overcome these forces before it can settle down to a smooth spread again. An intermittent operation will cause the mix trucks to bunch up at the plant. This results in erratic operation at the plant as well as the paver. To minimize such disorderly operations, it is necessary for the paver to be operated at a speed in balance with the plant production. It is true that all stops cannot be avoided, however when plant and paver output are in balance, a large portion of the interruptions are eliminated and stops are held to a minimum.

Rolling procedures and requirements should be discussed. Current Standard Specifications require that:

(1) a minimum of 2 rollers be used with each spreading operation and

(2) the final rolling of the top or surface course shall be done with a steel roller, unless specified otherwise by the Engineer.

If a vibratory roller is used, it shall be operated in the static mode on the final pass. This requirement permits a wide latitude in the choices of types and weights of rollers to be used. It is difficult to foresee at pre-construction conference time the job conditions that will exist at paving time, for which reason the understanding should be that when maximum compaction is not fulfilled, the types and/or weights of rollers shall be altered as a corrective measure.

Haul trucks should be discussed in regard to the number to be used, size of each, covering to be provided, method of cleaning and need for insulation when low temperatures and long hauls are expected. The use of petroleum derivatives for coating the truck beds is

prohibited. Division 150 of the Standard Specifications explains the requirements for hauling equipment.

The spreading operation should be discussed in great detail. The Contract Documents' construction requirements for each type of pavement should be familiar to both Contractor and KDOT personnel. The laydown requirements for all kinds of mixtures are similar, and are discussed in Division 600 of the Standard Specifications. There should be an understanding as to the temperatures at which spreading will not be permitted. Temperature, both air and road surface and weather limitations are discussed in Division 600 of the Standard Specifications. All rolling shall be achieved before the bituminous mixture cools to the specified temperature. The number of lifts in which the pavement is to be constructed should be discussed so as to stay within the requirements of the Contract Documents.

The offset of the longitudinal joint between successive lifts should be discussed and understood. The construction joints are discussed in Division 600 of the Standard Specifications.

The method by which the mix is weighed for payment should be discussed. The Standard Specifications provide for payment of aggregate by the wet ton.

The procedure in rejecting a batch or load of mixture should be discussed. The relationship between operators and inspectors will remain at a high level if this detail is discussed and understood beforehand.

Any widening operation shown in the Contract Documents should be discussed to account for the handling of traffic. Widening should be placed well ahead of the paving operation to allow ample time for sufficient rolling and time for cooling.

c. Checklist.

- It is understood by both parties, at which points inspectors will be stationed?
- It is understood by both parties, which operations will be supervised by a superintendent and/or foreman?
- Has the Contractor's process control plan been discussed?
- Has the continuity of operations been planned?
- Has the number and types of rollers to be used been discussed?
- Has the number of trucks to be used and type of coating for beds been determined?
- Has the width of spread in successive layers been planned?
- Has the thickness of successive layers been planned?
- Is it understood who is to issue and who is to receive instructions?
- Have weighing procedures and issuance of scale tickets been determined?
- Has the procedure for the rejection of unsuitable material been agreed upon?
- Has the method of handling traffic been established?
- Has the method of accounting for asphalt quantities been discussed?
- Has asphalt handling and storage been discussed?
- Has the method of calibrating the cold feed, aggregate or Ramsey scales and asphalt scales been discussed?
- Has proper procedures for stockpiling of material been discussed?

4.05.05 CONVENTIONAL SEALING

Bituminous sealing is described as an application of bituminous material followed by an application of cover material. The bituminous material used may be a cutback asphalt, an asphalt cement or an emulsified asphalt. The cover material may be any of the several grades

shown in the Contract Documents. Specific types for a particular project are stipulated in the contract.

a. Design. In order to determine the rates of application of the asphalt and cover material, a standard method of computation is used. The design approach utilizes the median particle size (M.P.S.) of the aggregate from results of sieve analysis tests, traffic count and roadway surface condition. Division 600 of the Standard Specifications lists the emulsion type and estimated application rates of the asphalt and cover material.

When graded aggregates are used, theoretical computations of the rates of application can only be used as an indication of the relation of the average particle size of the aggregate and the quantity of asphalt required, which when applied to this type of aggregate means very little.

For clarification, practically all the material of single sized aggregates is retained on 2 consecutive sieves. The quantity of both asphalt and cover material, when computed from the average particle size of graded aggregates will prove to be unsatisfactory. The average particle size of these aggregates will indicate a rate of asphalt application which will be sufficient to cover the smaller sizes of aggregate, but will be insufficient to hold the larger sizes of aggregate. If the larger sizes of aggregate, which in most cases is the premium material, are to be retained in the seal coat rather than be whipped off the road by traffic, the indicated rate of application of asphalt must exceed the calculated amount. Since in all probability, a black rather slick surface will result when using this type of aggregate, the asphalt is usually increased from the calculated rate by trial and error to a rate which will retain the larger sizes of aggregate without excessively covering the average sized aggregate.

When using single-sized aggregate for cover material, it is expected that light-colored granular surfaces be obtained. This can be accomplished only by rigid control of the rates of application of the asphalt and cover material. When using single-sized aggregates, it is possible and practical to predetermine the rates of application of the asphalt and cover material.

In general, the computations will give accurate results for asphalt and aggregate quantities when one-sized or nearly one-sized aggregates are used. However, for graded aggregates the computed quantity of asphalt will probably need to be increased since the average particle size will not provide enough asphalt to hold the larger particles in place.

The theoretical rates of application of cover material and asphalt may be computed as shown in the following example:

FIGURE IV-4

KANSAS DEPARTMENT OF TRANSPORTATION
BITUMINOUS SEALING DESIGN

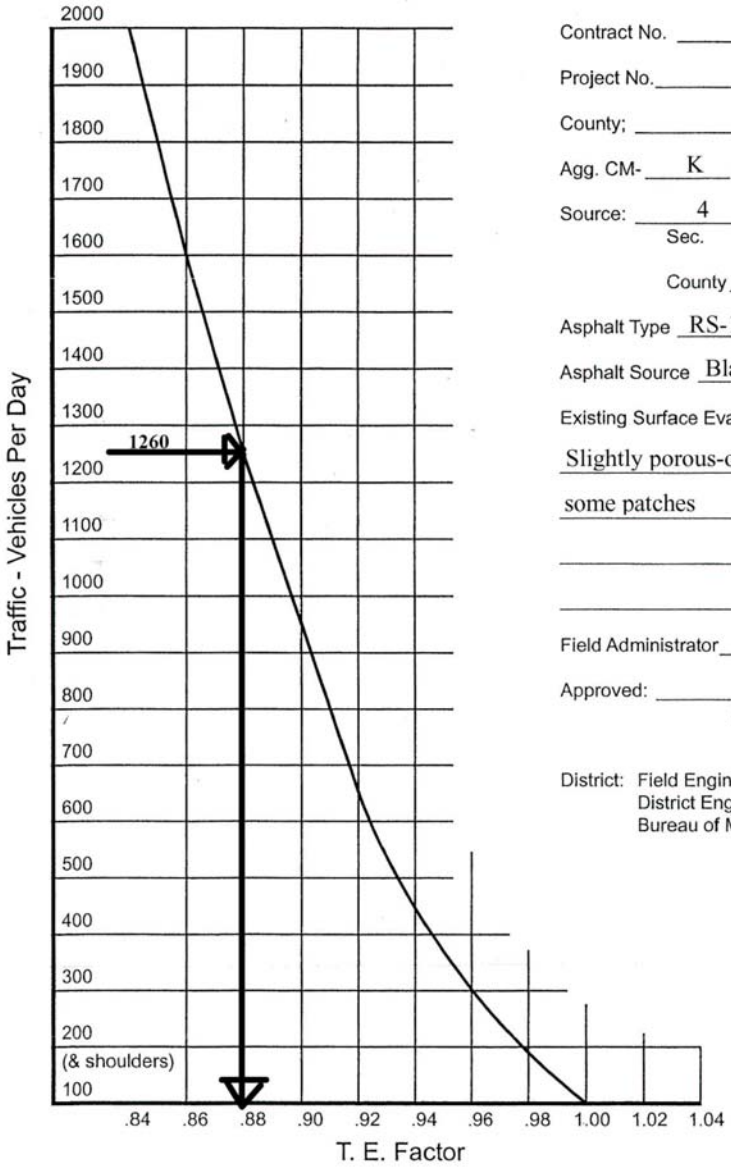

Contract No. 503076295

Project No. 160-4 K 9298-01

County; Barber

Agg. CM- K Qual. No. 90-8261

Source: 4 (Sec.) 17S (Twp.) 21E (Range)

County Seton

Asphalt Type RS-1H

Asphalt Source Black Gold, Inc.

Existing Surface Evaluation:

Slightly porous-oxidized,

some patches

Field Administrator

Approved: District Materials Engineer

District: Field Engineer
District Engineer
Bureau of Materials & Research

Rev. 10-02

D.O.T. Form No. 683

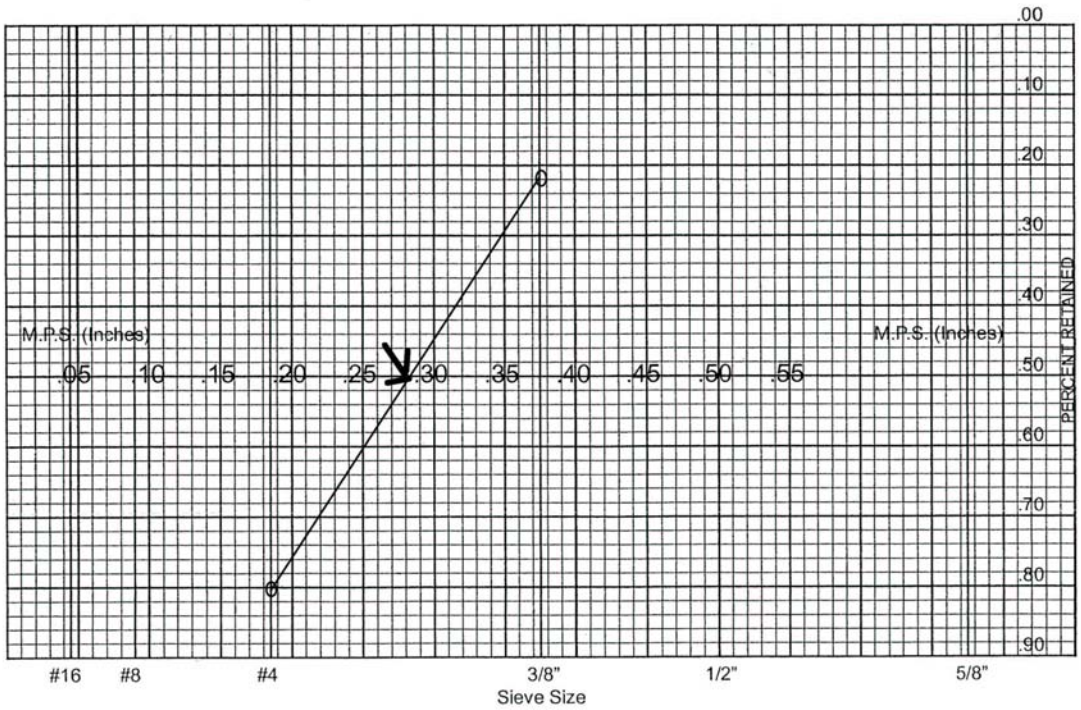

Median Particle Size (M.P.S.) = 0.285 " Traffic Count 1260 V.P.D.

T.E. Factor X 0.88 (From Graph) (For traffic over 2,000 V.P.D., the T.E. Factor = 0.84)

Basic Residue Rate = 0.251 Gals. / Sq. yd.

Pavement Condition Adjust. = +0.02 Gals. / Sq. yd. (See Below)

Revised Application Rate, R_a = 0.271 Gals. / Sq. yd. (Residue)

Revised Application Rate, $R_e = \frac{R_a}{\%\ \text{Residue}} = \frac{0.271}{0.68} =$ 0.40 Gals. / Sq. yd. (Bitumen)

Aggregate Rate $A_{base} = \frac{36}{\text{M.P.S.}} = \frac{36}{0.285} =$ 126.3 Sq. yd. / Cu. yd.

Theo. Max. Aggregate Rate, $A_a = A_{base}$ X (Factor) = 126.3 X 0.90

A_a = 113.7 Sq. yd. / Cu. yd.

CM-	Factor
A	0.70
D	0.90
E	0.94
K	0.90
L	0.90

Pavement Condition	Adjustment	
Flushed Asphalt Surface	– 0.03	Gals. / Sq. yd.
Smooth, Non-porous Surface	0.00	Gals. / Sq. yd.
Slightly Porous, Oxidized Surface	+ 0.02	Gals. / Sq. yd.
Slightly Pocked, Porous Surface	+ 0.04	Gals. / Sq. yd.
Badly Pocked, Porous, Oxidized Surface	+ 0.06	Gals. / Sq. yd.

It must be remembered that these design values are based on the premise that the particles of aggregate have approximately the same height as their length and width.

The use of excessively flat or elongated aggregate particles may necessitate a modification of the theoretical rates of application of both the cover material and the asphalt. The presence of an excessive amount of flat particles in the cover material would decrease the effective median particle size to some thickness below the theoretical, which would indicate a decrease in the rate of application of cover material and asphalt. If it can be assumed that the flat particles of cover material assume a flat position under rolling, it can be seen that the application of more cover material than the calculated quantity would only result in placing one particle of cover material upon another, and with the corresponding decrease in the rate of application of asphalt, the relationship of asphalt, aggregate and embedment would be out of balance, and the quantities calculated would probably not give satisfactory results.

The calculated rate of application in the outlined procedure indicates the quantity of asphalt that is necessary to be permanently retained around the aggregate particles and above the existing surface to give satisfactory results. If cutback or emulsified asphalt is used, the calculated rate of application must be increased an amount equal to the diluent content of the cutback asphalt or the water content of the emulsified asphalt. The rate of application also must be adjusted to compensate for the old roadway surface condition. The recommended adjustments for pavement condition are shown on Form 683.

The exact quantity of asphalt may need to be adjusted based on observation of trial rates of applications on selected test sections.

b. Preparation of Road Surfaces. Prior to any application of bituminous material, the roadway must be cleared of all foreign material. This can be done with power brooms, small blades, hand tools or other approved methods. The surface of the road must be dry at the time any bituminous material is applied. A good rule of thumb is to wait after a rain until the soil adjacent to the roadway has dried down 0.25 inch. At this time, the checks and cracks are probably dry enough to eliminate any trouble from moisture.

c. Application of Bituminous Material. The distributor should be examined to see that it conforms to the Standard Specifications and contains the calibration certificate. It also should be checked at least once each year to determine if recalibration is necessary.

In addition to the items shown on the calibration certificate under "OPERATION", the following questions should be answered.

- Is truck tachometer satisfactory?
- Is pump tachometer or pressure gauge satisfactory?
- Is pump pressure satisfactory?
- Is by-pass system working properly?
- What is the pump capacity?
- Does the spray bar shift laterally?
- Is spray bar adjustable vertically?
- Is thermometer and thermometer well satisfactory?
- Are all nozzles the same type and size?

- Are nozzles set at recommended angle? Require Contractor to furnish a nozzle adjustment wrench at the specified angle.
- Is there excessive dripping when nozzles are closed?
- Is height of spray bar set to give the fan pattern recommended by manufacturer?

It is very important that the distributor is traveling at proper speed when application starts. This will reduce any unsightly heavy areas at the beginning of each shot. The truck should never have to shift gears on hills. The bar should always be shut off before it "blows" or pump air at the end of each shot. Special care should be taken to obtain the proper center lap. This will differ with nozzle spacing and distribution. If the center lap is too great, an unsightly black streak or bleeding will develop on the centerline. If it is not enough, the aggregate will ravel or strip off at the center. It is also important to get the center covered as soon as possible so the entire width will be uniform in texture.

d. The Do's and Don'ts of Bitumen Application.

- Do turn nozzles so that fans are at proper angle to spray bar (Approximately 300). Sprays should not touch or merge -- this causes puddling. Check this at least once each day.
- Do check bar height at start of each shot for manufacturer's recommended ground to nozzle distance over the entire bar length. Distributor manufacturer's label should give a height at which their nozzle design and positioning will give the smooth overlapped spray pattern. Any departure from this recommended distance will cause a streaking. The use of snubbers to hold constant height despite load variation, have been successful.
- Do check the spraying pressures so as to give straight edged spray fan. If pressure is too high, spray will fog and distort. If pressure is too low, spray fan will sag with heavy edges and decided longitudinal streaking. (Use highest possible pump pressure or speed.)
- Do heat the bitumen to upper part of spraying temperature range to eliminate as nearly as possible the heavy edge that is characteristic of all fan type sprays.
- Do keep material clean at spray bars by regularly cleaning and inspecting strainers. Clean each night. Small pieces of coke or carbon will clog the nozzles. Sections of the spray bar may be starved for material, due to foreign obstructions. Cleanliness of distributor usually means good work.
- Do have an accurate calibration of the distributor tank.
- Do make check on first shots, and apply correction to application charts. Viscosity of materials on jobs will differ from that used by manufacturer in calibration.
- Do embed the cover material into the asphalt membrane as soon as possible so it drops in place while asphalt is expanded by air, water or volatile.
- Do roll immediately and thoroughly to give good bonding.
- Don't use nozzles which have burrs or mechanical imperfections; the nozzle should spray a balanced spray.
- Don't use material too hot. If too fluid, the spray pattern will not be uniform and the fans will overrun one another.

- Don't use material too cold. Material too viscous will narrow the spray fan causing heavy application directly under the nozzle and material will not knit together.
- Don't try to seal a dusty or wet surface.
- Don't expect to obtain satisfactory results if air, wind or surface are too cold. Any one or all three of these chill a thin layer of material before it can knit together, either by gravity or cohesion, into a smooth surface.
- Don't make shots too long before applying cover material.

e. Application of Aggregate. Standard Specifications require a self-propelled spreader for the spreading of cover material. The careful operation of the spreader and hauling equipment is essential to obtaining a uniform surface. The trucks should never cross the uncovered asphalt at the center joint without first covering with cover material. All operators should use extreme care in clutching so wheel slippage does not occur.

A general fault is to use too much cover material. A good procedure to follow is to reduce the application of cover material until "picking up" is just starting. Then, increase the spread one notch. Normally, some black staining (not flushing) of the asphalt is expected in the wheel paths.

Occasionally, foreign material will get in the cover material from careless loading from the stockpile. This will plug up the spreader box and cause streaking which cannot be tolerated. If the spreader box tends to place the cover material in corrugations, usually slowing down the truck will eliminate this problem. However, carrying more air in the tires on the spreader box may permit higher speeds of application and still eliminate corrugation in the cover material.

The aggregate spreader should cover to within a specified distance of the inside edge of the first shot. If any aggregate overlaps this joint, it must be cleaned back or an unsightly overlap will develop on the next pass. It is the responsibility of the Inspector and the Contractor to have enough aggregate to cover the next shot before allowing the distributor to commence.

An improper transverse joint will stand out as a defect for years. Building paper shall be used in making proper transverse joints. The front edge of the paper should be placed on the aggregate where the asphalt application is uniform. A square blade shovel should be used to scrape off all excess material in front of the paper. If this is done carefully, it will make a neat straight joint that will seldom be noticed.

When bids are taken by the cubic yard, each truck should be accurately measured and the level full volume computed. These measurements and computations should be recorded in the project records, and the full load (to the nearest ¼ cubic yard) plainly marked on the truck bed. The Inspector should be alert for any changes in sideboards or other conditions that would affect the volume of the vehicle.

It is necessary to review the current Contract Documents. List the specific requirements for hauling, heating and compacting equipment, and document these checks.

<u>Cover Material Check List</u>

- Quality Laboratory Number
- Aggregate acceptance tests shall be conducted at the final stockpile location.
- Test reports on file
- Moisture within Standard Specifications
- Tickets properly made and initialed
- Tally sheet made daily and checked

- Material properly stockpiled
- Documentation as per manual

f. Immediately following the application of cover material, it shall be embedded by pneumatic rolling. A sufficient number of pneumatic rollers shall be furnished so the initial complete roller coverage is completed within 15 minutes after the application of the cover material. For hard aggregate CM-A, B, or E, the Inspector may require the use of a steel roller for one of the coverages, provided that excessive crushing of the cover material does not occur.

It is necessary that vehicle speeds be controlled in the fresh sealed areas to avoid flying particles and tearing the aggregate from the surface. It should be understood with the Contractor that this speed limit applies to his hauling equipment as well as the traveling public.

g. Field Notes. It is necessary to keep a complete record of the asphalt and aggregate application. Random checks of rate of application of aggregate may be made by occasionally checking the distance covered by one truck with a complete record made of aggregate used per mile.

UNTIL SUCH TIME AS THE MANUFACTURES PROVIDE DISTRIBUTOR SPECIFICATIONS IN METRIC UNITS, THE UNITS SHOWN BELOW WILL REMAIN AS ENGLISH UNITS.

FIGURE IV-5

DISTRIBUTOR	NOZZLE SIZE	NOZZLE SPACING (INCHES)	NOZZLE SLOT ANGLE (DEGREES)	NOZZLE HEIGHT ABOVE ROAD (INCHES)	PUMP DISCHARGE GAL./MINUTE OR PUMP SPEED	PUMP PRESSURE (P.S.I.)	APPLICATION RATE GAL. PER SQ. YD.	COVERAGE
CHAUSSE	1/16 IN.	4 6	45 WITH SPRAY BAR	6 TO 15	95 GPM AT 420 RMP	5 TO 15	VARIES WITH SIZE OF BAR AND SPEED OF TRUCK	4 IN. TRIPLE LAP 6 IN DOUBLE LAP
	1/8 IN.	4 6	45 WITH SPRAY BAR	6 TO 15	95 GPM AT 420 RMP	5 TO 15	VARIES WITH SIZE OF BAR AND SPEED OF TRUCK	4 IN. TRIPLE LAP 6 IN DOUBLE LAP
	3/32 IN.	4 6	45 WITH SPRAY BAR	6 TO 15	45 GPM AT 420 RMP	5 TO 15	VARIES WITH SIZE OF BAR AND SPEED OF TRUCK	4 IN. TRIPLE LAP 6 IN DOUBLE LAP
	3/16 IN	4 6	45 WITH SPRAY BAR	6 TO 15	45 GPM AT 420 RMP	5 TO 15	VARIES WITH SIZE OF BAR AND SPEED OF TRUCK	4 IN. TRIPLE LAP 6 IN DOUBLE LAP
ETNYRE	1/16 IN.	4	30 WITH SPRAY BAR	12	5-7 GAL. PER FOOT OF BAR	--------	0.3 TO 3.0 GALS	TRIPLE LAP
	1/8 IN.	4	30 WITH SPRAY BAR	12	10-15 GAL. PER FOOT OF BAR	--------	0.3 TO 3.0 GALS	TRIPLE LAP
	3/32 IN.	4	30 WITH SPRAY BAR	12	7-10 GAL. PER FOOT OF BAR	--------	0.3 TO 3.0 GALS	TRIPLE LAP
	3/16 IN	4	30 WITH SPRAY BAR	12	12-20 GAL. PER FOOT OF BAR	--------	0.3 TO 3.0 GALS	TRIPLE LAP
	S36-5	4	30 WITH SPRAY BAR	12	10-15 GAL. PER FOOT OF BAR	--------	0.6 TO 3.0 GALS	QUADRUPLE LAP
GRACE 200 SERIES	1/16 IN.	6	60 WITH SPRAY BAR	11	100 GPM	35	0.05 TO 1.0 GALS.	DOUBLE LAP
	1/8 IN.	6	60 WITH SPRAY BAR	9	325 GPM	35	0.05 TO 1.0 GALS.	TRIPLE LAP
	3/32 IN.	6	60 WITH SPRAY BAR	11	100 GPM	35	0.05 TO 1.0 GALS.	DOUBLE LAP
	3/16 IN	6	60 WITH SPRAY BAR	9	325 GPM	35	0.05 TO 1.0 GALS.	TRIPLE LAP
LITTLEFORD	1/8 IN. SQ. SLOT	4	15 WITH SPRAY BAR	10 IN. MIN. 12 IN. MAX.	12.5 GAL.PER FOOT OF BAR	--------	0.05 TO 3.3 GALS.	TRIPLE LAP
	1/8 IN. "V" SLOT	4	15 WITH SPRAY BAR	10 IN. MIN. 12 IN. MAX.	12.5 GAL.PER FOOT OF BAR	--------	0.05 TO 3.3 GALS.	TRIPLE LAP
ROSCO	NO. 0	4	25 WITH SPRAY BAR	10	--------	10 TO 50	0.05 TO 2.0 GALS	TRIPLE LAP
	NO.1	4	25 WITH SPRAY BAR	10	--------	10 TO 50	0.05 TO 2.0 GALS	TRIPLE LAP
	NO. 2	4	25 WITH	10	--------	10 TO 50	0.05 TO 2.0 GALS	TRIPLE LAP

DISTRIBUTOR	NOZZLE SIZE	NOZZLE SPACING (INCHES)	NOZZLE SLOT ANGLE (DEGREES)	NOZZLE HEIGHT ABOVE ROAD (INCHES)	PUMP DISCHARGE GAL./MINUTE OR PUMP SPEED	PUMP PRESSURE (P.S.I.)	APPLICATION RATE GAL. PER SQ. YD.	COVERAGE
SEAMAN - GUMMISON	1/8 IN.	4	SPRAY BAR 15 WITH SPRAY BAR	9	375 GPM AT 375 RPM	--------	0.1 TO 3.0 GALS	TRIPLE LAP
	3/16 IN	4	15 WITH SPRAY BAR	9	375 GPM AT 375 RPM	--------	0.1 TO 3.0 GALS	TRIPLE LAP
SOUTH BEND (MUNICIPAL)	1/16 IN.	4 6	22 WITH SPRAY BAR	9 IN. MIN. 11 IN. MAX.	90 TO 375 GPM	20 TO 40	0.1 TO 3.0 GALS	TRIPLE LAP
	1/8 IN.	4 6	22 WITH SPRAY BAR	9 IN. MIN. 11 IN. MAX.	90 TO 375 GPM	20 TO 40	0.1 TO 3.0 GALS	TRIPLE LAP
	3/16 IN.	4 6	22 WITH SPRAY BAR	9 IN. MIN. 11 IN. MAX.	90 TO 375 GPM	20 TO 40	0.1 TO 3.0 GALS	TRIPLE LAP
STANDARD	1/16 IN.	4	45 WITH SPRAY BAR	9	375 GPM AT 675 RPM	50	0.1 TO 1.0 GALS.	TRIPLE LAP
	5/32 IN.	4	45 WITH SPRAY BAR	9	375 GPM AT	50	0.1 TO 1.0 GALS.	TRIPLE LAP

The asphalt rate should be computed for each shot with the record being kept in a bound field book and filed with the project records. A typical example for a shot record is shown in the documentation manual. It is important to measure the stab while the distributor is in a level position to insure a correct stab.

4.05.06 BITUMINOUS PRIME COAT

a. General. This work is the application of a cutback asphalt to a rock, sand or dirt base to obtain a surface so additional applications of bituminous material can be applied. It may also be used as the surface treatment for completed bituminous bases. The equipment and material shall be in accordance with the Contract Documents.

b. Preparation of Road Surfaces. It is essential that the road surface be hard, smooth and uniform. The loose material must be bladed and cleaned with mechanical sweepers or blowers. It is impossible for a blade to get the surface clean enough without brooming. After the surface is broomed, it is usually necessary to give it a light application of water approximately 15 minutes in advance of the asphalt application. This cuts the dust film and makes for better penetration of the asphalt.

c. Weather Conditions. The Contract Documents gives the temperature and seasonal limitations. In order to obtain good penetration, it is necessary for the base to be warm. If the base is cool, the cutback asphalt will chill as it contacts the surface and will not completely penetrate the surface. When this happens, the desired penetration is not obtained and the excess asphalt will have to be blotted, causing additional work and expense.

d. Application of Prime Coat. The rate of asphalt shall be determined by the Project Manager. It is necessary to apply as much cutback asphalt as the base will absorb, but not so much that it will require excess blotting. Dense AB-2 bases and most existing gravel surfaces will require from 0.3 to 0.4 gallons per square yard of asphalt while generally the dense, flushed and glazed surfaces of AB-3 bases will absorb no more than 0.2 to 0.25 gallons per square yard of asphalt. Good judgment based on past experience plays an important part in determining the rate of application.

It is desirable to allow the prime to set at least 48 hours before blotting; however, on minor secondary roads, local traffic is usually maintained through construction. The only practical way this can be done is to apply the asphalt on one side in the morning, apply enough blot to allow local traffic through, then complete the other side. This will allow at least 4 hours

prior to blotting. This should only be done in the areas where the road cannot be completely barricaded. Where prime coat is applied to the completed bituminous base, it is mandatory that this be done after the final rolling and before traffic is allowed on the base. Extreme care should be taken to keep from obtaining a slick surface which is a traffic hazard.

e. Maintenance of Prime Coat. It is the Contractor's responsibility to maintain, protect and repair any damaged prime coat. It normally takes at least 72 hours before the prime cures out enough to apply additional asphalt surfaces. During this period it may be necessary for the Contractor to blot, drag and maintain the completed prime coat.

Blotting material to be used should be determined in advance. If available, fine sand is considered most satisfactory.

4.05.07 SLURRY SEALING

a. General. This work shall consist of the application of Slurry Seal Material to an existing surface. The Slurry Seal shall consist of a mixture of emulsified asphalt, mineral aggregate and water, properly proportioned, mixed and spread on the existing surface in accordance with the Contract Documents and as directed by the Engineer.

b. Equipment. Apart from the slurry machine, only a small amount of supporting equipment is required for a complete slurry project. Usually a sweeper front-end loader combination, water truck, asphalt tanker, nurse trucks and various hand tools are all that are necessary. Occasionally, a roller may be required for some special applications.

(1) Slurry Machine. Slurry Machines are equipped to carry all materials necessary for producing bituminous slurry on the job site, and to mix the different ingredients proportionally in a special mixer. The finished slurry is discharged into a spreader box that spreads the slurry on the pavement as the box is pulled behind the slurry machine. The machine shall be operated continuously while loading to eliminate unnecessary construction joints.

All machines have separate water and emulsion tanks, and the size of these tanks varies with the machine. The tanks can be filled through hatches on top of the equipment and through bottom loading attachments. The emulsion tank should be inspected regularly to prevent excess build-up of asphalt. The screen in the bottom of the tank should be inspected to prevent hardened asphalt from accumulating and entering the lines. All water lines, filters and screens should be kept clean. The emulsion tank should be filled from the bottom in order to minimize foaming and/or disturbing any hardened asphalt materials which may be in the tank.

The aggregate is fed from the bin by a belt or auger system through a controlled gate opening. The bin is generally charged with any standard front-end loader.

The mixer should be cleaned after each day's operation. The Inspector should make certain the mixer is clean before use. He should also examine the mixing compartment and blades to assure there is no excessive wear which would cause poor mixing.

(2) Spreader Box. The spreader box is designed to apply the slurry evenly over the pavement. The box has steel front and side parts, and either a steel or flexible squeegee screed. The slurry is fed directly from the mixer to the box.

The box is usually extendible from 8 to 13 feet at any desired increment. It is raised into a carry position by means of electric, hydraulic or hand controls depending on the machine. Lateral movement is made by hand or hydraulic controls. The box should be hinged in the center to allow for crown adjustment.

Located on the rear squeegee are adjustment screws which help control the thickness of the slurry. The thickness of the slurry is chiefly governed by the maximum size aggregate being used, the consistency of the mix, and surface texture of the old pavement.

The spreader should be kept reasonably clean while in use, and thoroughly cleaned after each day's operation. Any material left on the spreader can cause a poor quality product and an unsightly appearance in the final pavement.

The machine moves as fast as the slurry can be produced and placed. If the slurry becomes low in the box, the operator signals the driver to slow down until the rate of production can catch up to the spreading rate. This usually takes some adjustment at the start of each new project, but as time progresses the rate of speed and the rate of production become uniform.

c. Materials.

(1) Aggregate: The Project Manager is responsible for seeing that aggregate for acceptance tests is sampled at the point of usage and that proper test reports are on hand prior to starting the work and that the aggregate is as called for in the Contract Documents.

(2) Mineral Filler: This material will be as specified by the Contract Documents.

(3) Emulsified Asphalt: A mixture of water, asphalt and an emulsifier is referred to as emulsified asphalt. In this process the emulsifier is the agent that permits the mixing of 2 normally immiscible materials.

(4) Water: Water is the major factor in controlling the consistency of the finished product. By weight, it normally composes from 4 to 12 % of the dry aggregate. A set amount of aggregate and a set amount of asphalt emulsion are introduced into the slurry machine mixer. To obtain the proper working consistency of the finished product, the water is increased or decreased. The water coats the aggregate particles before the emulsion does, thus reducing the frictional resistance of the aggregate and allowing the emulsion to more easily coat the aggregate particles. Water shall meet the requirements of Division 2400 of the Standard Specifications.

d. Construction.

(1) Surface Preparation: Prior to application of the slurry, the entire surface will be cleaned of all foreign materials. Following the cleaning and immediately prior to the application of the slurry, the surface should be given a light application of water. This application must be uniform and light enough that it does not cause puddles of water to stand on the pavement surface. In the event that small depressions do result in surface puddles, these wet areas should be hand broomed or squeegeed to remove the excess water.

(2) Slurry Placement: It is very important in the actual laying procedure for the Inspector to keep a close watch on the spreader box itself. The homogeneous slurry should roll in one continuous mass. The "roll" will ordinarily be about 12 inches wide. The operator keeps the box in the desired lateral position by hand or hydraulic controls. It is, of course, the responsibility of the driver to drive as straight a line as possible. This is accomplished by a chain that is attached to the front bumper of the truck, and allows the driver to know approximate location of the edge of the box.

When coming to the end of a pass, the operator should cut the machine off in order to have as little slurry left in the mixer as possible, and none left in the spreader. This, of course, is a judgment factor and depends on a good operator. The operator should cut off the materials for making the slurry in the same order that he turned them on. He should be sure that the slurry is evenly distributed over the box, clear to the end of the pass. At times, this may require extra

help from someone. If slurry is left in the mixer, the operator should cut the mixer off as soon as possible to prevent over-mixing. If slurry is left in the spreader box, the operator should be sure that there are people to handle the slurry when he raises the spreader box. When he comes to the end of the pass, the operator cuts off the spray bars and raises the spreader into a carry position. It is very important that anytime the operator stops the truck, the spray bars are cut off, and just as important that they be restarted when the operation proceeds.

(3) Handwork: Another important part of the slurry operation is handwork. Good handwork is just one of the many things that can make what would have been a satisfactory job a superior job. Handwork can look as good as work done by the machine if it is done properly. It is best to do as much handwork ahead of the machine as possible. This is particularly true in those areas which require a great amount of handwork. Sometimes, slurry is left in a pile for handwork to be done, while the machine is laying close by.

The best way to tell if the slurry is in a homogeneous mass is by handwork. This is because the slurry is hard to move around with a hand squeegee, if settling or separation has taken place. Normally, 24 to 36 inch rubber hand squeegees are used. Generally, a burlap drag is used after the hand squeegee as a finishing tool. The person operating the squeegee should rapidly move the slurry in place. The area should have been previously dampened with the hand hose of the slurry machine.

e. Joints.

In this work, as in all bituminous sealing, the work should be conducted in such a manner that all lane widths and longitudinal joints will conform to the existing traffic lanes.

(1) Transverse Joints: One of the most important operations in getting a good seal and appearance on a job is by making a good joint. Transverse joints are just as important as longitudinal joints, but oftentimes do not receive as much attention due to their short length. When the machine runs out of material, the operator will open the mixer gate, completely emptying the mixer. The slurry is spread out over the pavement, and it does not have to come out in a straight line, since the new pass will start over it. However, since some of this slurry may have been in the mixer for some time, it could be over-mixed. It is advisable that in making the new joint, the driver back the machine 10 to 15 feet prior to continuing the pass.

There are normally two ideal times for making a joint. One is when the slurry is still in a completely uncured, semi-fluid condition. The other is when the slurry is completely cured. The time between these two periods is when the most trouble develops as most of the water is out of the emulsion, but the asphalt is still not firmly attached to the aggregate. In this state, the slurry can be easily scarred by any type of heavy object that may run over it, leaving a poor appearance. If this is the case, the operator should lightly wet the area that the spreader will touch by using the hand hose. He should then start his procedure as previously described in the actual laying operation.

(2) Longitudinal Joints. Longitudinal joints are much more critical, especially to the eye, than the transverse joints. This is because of the very nature of their length along the pavement. As mentioned in the preceding paragraph, the ideal time to make any joint is either when the slurry is completely uncured or when it is totally cured. If it is in the intermediate state, the spray bars and sometimes hand hose should be used to help semi-wet the joint as the box is being dragged over it. Also, in this case, the use of a drag is often helpful. The drag (burlap or some form of carpeting) is pulled along the joint seam and will cause the fresh slurry from the spreader

box to evenly distribute itself over the joint. The joint can be just as good as a Contractor wants it to be, or just as bad as the Inspector allows it to be.

(3) Curing: There are several factors that are involved in the curing of slurry. For anionic type slurry, the water must evaporate from the surface before the slurry is cured. This depends on several factors, one of which is the thickness of the slurry. The thicker the slurry is, the longer the curing period. It is also characteristic of an anionic type emulsion to cure from the top downwards. Thus, a crust can form on the surface and give a cured appearance, while the slurry underneath will not be cured. The Inspector should watch for this type of scumming, and not allow any traffic over the surface until the slurry is completely cured.

For a cationic type slurry, the break of the slurry is chiefly by chemical reaction, although the above mentioned factors would still have some bearing on the curing. The cationic emulsion normally breaks from the bottom of the pavement up, and therefore, does not give a false break. Here again, however, the Inspector must be sure that the slurry is completely cured before the area is opened to traffic.

Another variable factor of slurry curing is climatic conditions, the most important factor being the wind. Wind moving hot air gives a favorable curing condition, and wind moving hot, dry air affords the best.

Normal curing periods range anywhere from 1/2 to 6 hours, but the average is from 2 to 4 hours. In any case, the application of the slurry seal shall be suspended early enough each day to permit traffic to safely travel over the completed work before sunset.

f. Special Problems.

The following are considered special problems for various slurry applications.

(1) Over-mixing: As previously discussed, one of the main objectives of the continuous mix slurry machine is to proportion, mix and lay the slurry in rapid order. The slurry is over-mixed when the asphalt attaches itself to the aggregate but does not readily attach the slurry to the old surface. Over-mixing can occur in a continuous mix machine, if at the end of a pass the operator fails to shut the mixer off while slurry is still inside. Over-mixing traps air into the system. This, along with over-beating the asphalt emulsion, causes a puffy malt-like appearance. The slurry also loses its luster and will oftentimes leave a discolored spot on the pavement. The Inspector should be constantly on the watch for over-mixing, because over-mixed slurry, with special handling, can be satisfactorily placed on the pavement.

(2) Lumps in the Mix: At times, a ball of aggregate will go through the mixer and not break-down before reaching the spreader box. This is especially true if the aggregate has a high percentage of clay-like particles. These particles tend to ball up in lumps when they become wet, and oftentimes will pass through the mixer unmixed. The best way to eliminate lumps in the slurry is to control the aggregates. Normally, the material will not have clay balls: however, if the amount of clay is minor, and if the aggregate must be used, there are several ways to eliminate this condition. First, reduce the size of the mixer gate opening. The gate of the mixer controls the mixing time of the slurry. If the mixer gate is open wide, the mixing time is less, and if it has a smaller opening the mixing time is more. Therefore, to increase the mixing time and break up the lumps, the gate opening should be smaller. Another method being used is placing a ½ inch screen over the spreader box where the slurry passes from the diverter through the screen and into the box. The screen will catch the lumps which can be later removed. If the lumps are left in the spreader box, they will pass out under the back squeegee, leaving streaks in the finished slurry and a discolored surface.

(3) Oversized Aggregate: The best way to prevent oversized aggregate in slurry is to be sure the material does not contain any. This is much easier said than done, since many times the loader will accidentally dig too deep in the stockpile and pick up some of the existing material that was already on the ground. This condition can be overcome by locating the stockpile on a paved surface or in an area where the loader will not pick up foreign material. Oversized aggregate will pass through the mixer, and in turn through the spreader box, but will catch under the back squeegee and leave streaks in the pavement. This situation can often be overcome by placing a ½ to ¾ inch screen over the spreader box where the slurry from the mixer passes through the screen before entering the spreader box. The screen will catch the oversized rock, yet permit the slurry to pass through. The rocks can be disposed of later. Another problem of oversized rocks is that they can get caught between the blades of the mixer and the sides of the mixer walls, thus causing the mixer shear pin to break, resulting in an unwarranted breakdown of the slurry operation.

The techniques described above would be considered as preventative measures for elimination of oversized materials. However, there may be specific restrictions set out in the Contract Documents concerning this matter, and no statement made above should be taken as relieving the Contractor of his responsibilities for providing the specified equipment and material.

(4) High Crowns and Superelevated Curves: A special problem that may arise when laying slurry in areas of high crowns and superelevated curves is the difficulty in distributing the slurry evenly in the spreader box. The thin consistency of the slurry will, of course, cause it to move to the low side of the box. The operator should divert the slurry constantly to the high side, as the low side of the box will fill itself by gravity. Sometimes an extra person is required to distribute the slurry in the spreader box by a shovel when coming to the end of a pass and all materials have been shut off.

(5) Steep Grades: Laying slurry on grades of 8% or more presents several new problems. It has been found through experience, it is best to lay the slurry going uphill whenever possible, although some contractors prefer just the opposite. Regardless of the method chosen, each has its advantages as well as its disadvantages.

In laying slurry uphill, it is usually easier to hold the slurry in the spreader box since the direction of movement of the machine forces the slurry to go through 2 sets of squeegees before leaving the spreader box. Oftentimes in a downhill operation, the slurry will overflow and/or push out under the front squeegee and get ahead of the machine.

An uphill operation will usually move at a more rapid pace, since there is no necessary worry of overflowing the front part of the spreader box. An uphill operation will usually require a somewhat thinner (more fluid) slurry to prevent laying too thick an application caused by the pressure of the slurry against the strike-off squeegee. For the downhill operation, the mix should be somewhat thicker to prevent excessive run-off of the slurry under the front squeegee. An uphill operation requires a more powerful truck to pull the heavy load uphill at a slow speed, while downhill operations will be harder on the truck brakes.

(6) Gutters: It is desirable to keep any type of paving from getting out of bounds. The slurry spreader box is designed to completely contain the slurry. This is accomplished by side and end squeegees which overlap and completely hold the slurry in the box. The small opening between the side and back rubber is to allow a little slurry to run outside the box to help make joints or work adjacent to curbs. This is a nominal amount and should not cause any runoff in the gutter.

(7) Clean-up: All areas which have been a part of the project will be restored to an acceptable condition. The Inspector should check the stockpile, storage and loading areas to determine that all excess materials have been satisfactorily disposed of and that no corrective action is required. He should also inspect the roadway area to assure that all spillages, excess materials and signs of poor workmanship or damage are corrected.

g. Check List for Slurry Seal Construction.

(1) Plant operation:

- Inspect aggregate for foreign materials.
- Inspect aggregate stockpile area; should have suitable base and drainage.
- Inspect mineral filler for lumps.
- Inspect water supply, if other than from a domestic source.
- Check moisture content of aggregate as required. Twice daily is normal minimum.
- Inspect asphalt loading area for adequate drainage in order to avoid asphalt on truck tires.

(2) Mixer Truck

- Calibrate asphalt pump.
- Calibrate water meter.
- Calibrate mineral filler feeder.
- Calibrate aggregate delivery system.
- Check aggregate gate setting as required. Twice daily is normal minimum.
- Check pug-mill for accumulated material and/or excess cleaning solvent.
- Calibrate odometer.
- Check for and demand uniform delivery of all materials to the mixer. This is extremely important.

(3) Slurry Box

- Check adjustment screws for uniform attack angle on belt.
- Check burlap for proper width and uniform coverage of surface.
- Check belts for wear.
- Replace burlap drag as needed. Normally replace each day.

(4) General

- Check traffic control.
- Check surface of roadway for cleanliness, surface texture, etc.
- Repair all traffic marks and other surface defects in finished product as required.

4.05.08 MODIFIED SLURRY SEAL

a. Requires a Job Mix Formula.

b. Requires Modified Emulsion Asphalt.

c. Equipment shall be in accordance with Division 150 of the Standard Specifications.

d. Application is the same as 4.05.07 "Slurry Seal".

4.05.09 COLD RECYCLED BITUMINOUS CONSTRUCTION

a. General.

This work consists of in-place recycling of reclaimed asphalt pavement (RAP) by milling, sizing of RAP, adding an additive, mixing, laydown and compaction of the reclaimed mixture. It may be used as a base course or as the top layer of pavement. The surface will take moisture, and therefore must be sealed. This may consist of hot mix bituminous concrete, slurry seal, conventional seal or other types of watertight surfaces. The cold recycle train is pulled by a large rotomill which mills 3 or 4 inches deep by 12.5 feet or more wide in one pass. The rate of production averages about 2 lane-miles per day.

The cold recycle train consists of a double deck screen and crusher, with all oversize material being continuously rerun until it goes through the proper size screen, and a pug-mill where a liquid additive is added by weight derived from belt scales electronically connected to a computer and a positive displacement variable speed additive pump.

The mix is then deposited in a windrow behind the train where it is picked up by a windrow pickup machine on the front of a conventional bituminous paver which lays the mixture. Irregular windrows require that some mix be moved before it is loaded into the paver hopper, unless the hopper is of sufficient capacity, and the amount of mix in the hopper is adequate to accommodate the irregularities. This may require that the paver be stopped temporarily, while a loader or other equipment is used to even the windrow. The equipment shall be available at all times to be used as specified.

Compaction is by both pneumatic and steel rollers.

b. Materials.

The sized RAP may be combined with a variety of materials including emulsified asphalt, rejuvenating agents, water, flyash and/or aggregate. The liquid materials are added at the front of the pug-mill while the dry materials are usually placed in a sized windrow on the pavement ahead of the milling machine and mixed with the RAP at the time of milling.

c. Design.

The traffic count, type of aggregate, hardness and amount of existing asphalt content determines the appropriate additives.

In order to obtain data for the cold recycle design, it will be necessary for the districts to core roadways which are candidates for cold recycling. Generally, 1 core per mile per side with a maximum of 40 cores should be collected from each project. The cores should be selected on a random basis both for stationing and distance from center line.

At the time the core samples are taken, the district will utilize a calibrated penetrometer device to probe the subgrade at each core location. The districts will also need to visit with the appropriate maintenance personnel to determine if the maintenance history of the candidate project indicates potential subgrade stability problems.

The cores will be measured by the districts to determine mat thickness. The districts will visually examine the cores and document the condition. The district will perform extraction tests from 1 core representing each mile, and the remaining core samples shall be sent to the Bituminous Research Engineer for additional testing. (If sufficient surface history is available, it may be possible to group several cores together prior to performing the extraction tests.) The district will determine the asphalt content, aggregate gradation and film thickness of the extracted samples.

Materials and Research will be responsible to collect and review the data submitted by the districts. They will do additional testing, including asphalt content, hardness and viscosity of the asphalt, and percentage of crushed aggregate in the RAP. The Engineer of Tests will provide the final mix design recommendations to the appropriate district for preparation of the Contract Documents. A copy of the design recommendations shall be sent to the Bureau of Construction and Maintenance, and when plans are involved, to the Bureau of Design.

d. Pre-work conference.

The following items should be discussed in detail at a pre-work conference so the Contractor knows what you expect from him, and you fully understand and approve of the Contractors methods:

(1) Milling and mixing. A uniform windrow is important to obtaining a smooth laydown. The windrow size is a function of the cross sectional area being milled. The most uniform windrow and smoothest laydown is obtained by milling a uniform depth the full width of the milling machine and letting the milled cross slope vary.

Water is added at the milling head for cooling purposes, however, it also aids in mixing and compacting. The amount of water is normally controlled by the rotomill operator; however, it can also be controlled by a person on the ground. It has no precision control and very seldom needs to be a concern, except to be sure it is turned off immediately when the milling machine is stopped to avoid saturating the RAP and causing an unstable spot in the cold recycled pavement. Normally, the amount of water at laydown is 2 to 4 % except when using flyash, then extra water will be required, usually in the 10 to 12 % range.

When the weather is clear and hot, and the temperature of the mix behind the pugmill reaches the softening point of the asphalt on the RAP (usually between 104 °F and 115 °F) the mixture becomes very sticky. This usually occurs in the late afternoon and can be helped by adding more water and keeping the paver close behind the recycle train. It can become so sticky that the pickup attachment and paver cannot handle the mix. When this happens, the operation must be shut down for the day, and the mix should be laid with a motorgrader before nightfall. The next morning, the area can be remilled and put through the train with very little or no additional additive, and laid in the normal manner with the paver.

Asphalt emulsion or rejuvenators are the usual additives and are normally added at a rate between 0.5 and 1.5 %. High asphalt content sand gravel mixes will fall in the lower ranges, while high limestone lean asphalt mixes will fall in the upper range. The content should be changed if the pavement varies in asphalt content or aggregate, however, the percentage should not be changed more than +/- 0.2 % without prior approval. It is possible to visually estimate the correct additive content, if the Inspector has had previous training and experience with cold recycling. Similar to hot mix, too much asphalt will result in rutting of the pavement, so if the amount of additive is incorrect, it is better to error on the lean side than too rich.

(2) Paving. The distance between the train and paver should be kept to the minimum distance that will allow the paver operator to anticipate any windrow size changes. Excessive distance between the paver and train allows the windrow to settle and dry on the outside, allows more potential for rain damage, and in the case of a paver breakdown, creates a situation where the mix will need to be laid by any reasonable means to allow traffic on the road overnight. A maximum reasonable distance should be established, and the train stopped if it reaches or exceeds that distance. A suggested rule of thumb is 500 feet; however, project specific

conditions dictate that the distance should be established by the Inspector. If rain is eminent, the distance should be decreased to the absolute minimum possible.

Segregation is undesirable and is difficult to eliminate. The segregation can be lessened by one or all of the following methods:

- Changing the position of baffles below the pug-mill outlet.
- Adding baffles if there are none.
- Changing the depth of the mix around the paver augers.
- Changing the depth of feed from the hopper.
- Changing the distance between the augers and the front of the screed.

One operation that is almost certain to cause segregation is to run the hopper from near full down, to near empty, which causes the coarse pieces of RAP near the sides of the hopper to be fed to the screed at one time.

Proper crown and cross slope should be maintained by the paver screed even though the depth of the mix may not be uniform from side to side. The screed vibrator shall be used as specified. If the screed is pulling and causing a non-uniform surface, adding more water at the milling head will help. Decreasing the distance between the auger and front of the screed may also help. The shorter the distance between the train and paver, the less water will be evaporated resulting in better mix workability.

(3) Compaction and density. Contract Documents require the use of a minimum of one double drum vibratory steel roller and one pneumatic tired roller. The vibratory roller may be used in the static mode.

The mix temperature at the time of compaction has a great influence on the density which can be obtained. It is extremely advantageous to have the mix temperature higher than the specified minimum, when obtaining the minimum density. The best possible condition to obtain the highest density is in the mid to late afternoon on a clear, warm day. As a general rule, the mix temperature will exceed the mid-afternoon ambient temperature by approximately (15 °F to 20 °F under these conditions. Due to the large number of passes required and depending on the skill of the roller operators, it may take up to 3 days to obtain the target density. The number of passes over the same spot may be up to 15 for the pneumatic and 10 for the steel vibratory. The pneumatic roller is to be used for breakdown. Standard Specifications require a minimum of 3 passes by the pneumatic roller. The steel roller may precede the pneumatic roller, provided the minimum density is attained. Determination of the density will be by nuclear meter in accordance with the latest Kansas Test Methods. The rate of turnout at the end of each pass should be very gradual to prevent ridges. These ridges are very difficult and in some cases impossible to remove.

The mat temperature on the second and later days following laydown will usually be several degrees warmer than the day it was laid, allowing any below specification areas to be successfully re-rolled to obtain satisfactory density.

(4) Traffic Control. The physical size of the train necessitates traffic control at intersections with other routes and railroads. Railroad schedules must be obtained and notice given prior to crossing railroad tracks. When the project is on a 2 lane road with no or very narrow shoulders, the Bureau of Traffic Engineering should be notified prior to beginning the work and requested to restrict over-width loads on that particular route, during the project.

(5) Miscellaneous. The surface of cold recycle is more likely to allow water to enter prior to having traffic on the surface; however, it will usually take some moisture any time prior to being sealed or overlaid. The specification requires the relaid material have 1.5 % moisture

prior to a subsequent course being laid; however, this does not take into account that porous aggregate in the original pavement will have absorption. Satisfactory results have been obtained by interpreting the 1.5 % moisture content of the recycled mixture as the difference between the moisture before milling and the recycled pavement at lay down; thus not taking into account any absorption of the aggregate. The time necessary for the moisture to return to below 1.5 % may vary from 1 to 10 days depending on weather conditions.

The additive pump should be calibrated on the first project of the season. Thereafter, the accuracy can be verified by contacting KDOT personnel from the previous project. On-the-job checks should be made on each tanker load. Rough checks can be made by comparing the indicated amount of additive with that calculated from the theoretical volume of existing pavement each 500 feet. A daily check should be made of the belt scale accuracy each morning preceding use. The electronic digital readouts vary by manufacturer, so it is important that the Inspector asks for an explanation from Contractor personnel and/or review the operator's manual.

4.06 BASE COURSES AND SUB-BASES

4.06.01 GENERAL

Base Courses and Sub-bases are primarily the foundations or subgrade for the various types of surfaces. They may include subgrade modification, treated subgrade, all types of aggregate binder base courses, portland cement treated base courses, road mix bituminous base course or plant mix bituminous base course. The specific type shall be constructed as specified in the Contract Documents. The construction procedures are common to most types of bases and the following instructions apply in general to the various types of base courses and sub-bases.

The Project Manager should study the available soil investigation reports. These reports describe the various soils, and contain moisture-density curves.

4.06.02 EQUIPMENT

The equipment for the specific type of base course is listed in the Standard Specifications. Prior to starting the work, the Inspector should check each piece of equipment for compliance with the Standard Specifications. This should be recorded in the project records. The quantity of equipment should in general be determined at the pre-construction conference. The material will be measured as indicated in the Standard Specifications. When the material is paid for by the cubic yard, each truck should be accurately measured and the level volume computed. These measurements and computations should be recorded in the project records to the nearest 0.25 cubic yard. The Inspector should be alert for any changes in sideboards or other conditions that would affect the volume of the vehicle load.

When windrow eveners are required, they will be capable of shaping separate windrows of material to a uniform cross section. If material is paid for by the ton, the weighing equipment shall be in accordance with the Standard Specifications. The Contractor shall have the scales checked, adjusted and certified by an approved testing firm prior to use. The calibration report is to be issued to the construction office prior to weighing any material.

4.06.03 MATERIALS

The Contractor is responsible for the quality control of the materials, and is to submit the results from the quality control tests as the material is being produced.

The Project Manager is responsible for seeing that the materials conform to the Contract Documents by causing the acceptance testing to be performed in accordance with the proper procedures and frequency.

If the material is paid for by the cubic yard, the volume can be determined by the method described above, or by developing a conversion factor from weight to volume and weighing each load. Whenever the quantity is based upon a weight, the loads are to be weighed by a bonded scale operator according to the Contract Documents. Care should be exercised to account for material that is produced but is not paid for.

4.06.04 SUBGRADE PREPARATION

The subgrade shall be prepared as shown in the Contract Documents for the different type bases or sub-bases. If the plans do not indicate any specific preparation of subgrade, the Standard Specifications require that the Contractor prepare the roadbed by sprinkling, blading, rolling and lightly scarifying, if necessary, to eliminate ruts and minor irregularities and to provide proper crown.

Regardless of the procedure used in preparing the subgrade, the Inspector should carefully check the subgrade at frequent intervals for crown grade and alignment. Also, check subgrade density, if definite density requirements are specified. In all types of subgrade preparation, the surface should be hard and firm, with a minimum amount of loose material remaining on the surface. If, in the opinion of the Inspector, the condition of the subgrade, after the work specified is completed, will produce an unsatisfactory surface on which to place the base or subbase, the Construction Engineer should be notified so arrangements may be made for adequate subgrade preparation.

After the subgrade is satisfactorily prepared, it is the Contractor's sole responsibility to preserve it in that condition. Any damage to the subgrade caused by weather conditions, hauling operations or any other reason shall be repaired immediately.

4.06.05 PRODUCTION AND DELIVERY OF MATERIAL

Before production of material begins, the Project Manager shall obtain all available aggregate reports. If a material survey report is not available, or a survey has not been made for each source of material, a survey should be conducted to determine the quality and quantity of the material at each location.

Uniformity is an essential part of the construction of satisfactory base courses and shall receive the strict attention of the inspection forces as well as the Contractor's forces, during all the phases of production, placing, blending and mixing of the materials. It is the Contractor's responsibility to show that the materials that he is submitting for acceptance are within tolerances. Therefore, the Contractor's process control test results are to be submitted to the construction office prior to any acceptance tests being performed.

4.06.06 ROAD MIXING METHODS

After every effort has been made to obtain uniformity in the production of the material, some unavoidable variations will remain. This non-uniformity may be reduced through the proper placing of the material on the road. The Inspector should make sure that each load is dumped in the distance allotted, and that no overlapping of the distance allotted to each load is permitted. Tables showing the length of spread for each weight or volume of load shall be calculated ahead of time for use during hauling operations.

Aggregates that constitute a large portion or all of the final mixture will usually not be placed in a single windrow for each lift. It is far easier to equalize several small windrows than to equalize a large one. Each individual windrow should be thoroughly evened before combining the separate windrows of material.

Individual aggregate, such as filler material, binder soil or crushed rock for sweetening, which constitute less than ¼ of the mix, may usually be placed in one windrow. The percentage used will not influence the uniformity of the total mix to any great extent, providing they are properly equalized before combining with the other material. Under no circumstances shall the various windrows be combined until each is properly evened. Nor, shall the windrows be dumped so close together that before evening, they become intermingled in any manner. The final windrow of combined aggregates shall be closely observed to see that uniformity is maintained during subsequent mixing operations.

Some materials are used in the construction of base courses and sub-base which require pulverizing. The Contract Documents give definite requirements for pulverization of most aggregates. Pulverization is usually accomplished with far less effort for an individual aggregate than after they have been combined with the other material. Pulverization should be accomplished as the material dries on the road by the use of tillers, disks, rollers, etc. No material shall be incorporated into the final windrow until it has been properly pulverized. Material not properly pulverized can produce an actual gradation and plasticity of the material in the windrow far different than the gradation and plasticity represented by the laboratory test.

The Contract Documents require a percentage of finer particles, and an overall gradation and plasticity which produces maximum density and stability. The lack of pulverization can greatly decrease the strength of the base, produce a condition which will make specific compaction difficult to achieve and lead to other deficiencies and difficulties. It is important that the material which constitutes the base or sub-base be pulverized, as nearly as possible, so it will represent the laboratory samples and meet all the requirements of the Contract Documents.

Mixing of the combined aggregate with the various binding and cementing agents may be performed either with blades, tillers, disks, harrows, etc. or by traveling plants.

When blade-mix methods are used to incorporate the water and/or asphalt with the aggregate, a sufficient number of blades, disks, harrows, tillers and distributors shall be provided to insure the rapid completion of the mixing operations. Prolonged periods of mixing with an inadequate amount of equipment only results in excessive evaporation of the water, and when asphalt is used, the loss of the original temperature and volatiles from the asphalt increases the amount of manipulation necessary to coat the aggregate particles and to obtain complete mixing.

After the various windrows of individual materials have been mixed and blended together, water may be added by spreading shallow lifts of material on the subgrade and watering each lift. The watered material is then moved across the roadbed and placed in another windrow on the opposite shoulder. It is important that the water be applied uniformly with pressure distributors and that mixing continue until a uniform moisture content is obtained. Considerable mixing can be eliminated, if the watered material is left in a windrow overnight to produce a more uniform moisture content. Sufficient water should be added to the material to insure adequate compaction, allowing some additional moisture to compensate for that lost through evaporation during the laying and rolling procedure. Moisture shall be added as the material is laid to insure thorough bonding of the various lifts and to compensate for any undue loss through evaporation.

4.06.07 TRAVELING PLANT MIX METHODS

In general, there are 2 types of traveling plants in use. One type elevates the aggregate into a hopper. The aggregate rate is then automatically controlled into a pug-mill by the speed of the machine. The liquids are controlled by the aggregate rate by a cascade controller. With the second type, the rate at which the aggregate enters the pug-mill depends upon the size of the windrow and the speed of the machine. The rate at which the liquids enter the pug-mill is automatically controlled by the speed of the machine, not the rate of aggregate. This can result in a varying liquid content.

It is obvious that the traveling plants which are able to control the rate of aggregate as well as the rate of liquid into the pug-mill can produce a more uniform mixture. However, it is important that an operation record be kept, and the actual proportions checked at regular intervals. The gate settings shall be adjusted to produce the desired mixture which may change due to the moisture content of the aggregates, their gradations, etc. Traveling plants should be operated with the "pick-up shoes" properly adjusted so that the material from the windrow is elevated into the bin without gouging the subgrade. The Inspector shall closely observe the resulting mixture to obtain as near complete mixing as is practicable.

The mixing time for a traveling plant depends on the charge and discharge rates of the pug-mill. The mixing time and the volume of material in the pug-mill may be controlled to some extent by raising or lowering the discharge end of the pug-mill. In order to secure the most efficient mixing, the pug-mill should operate with the discharge end raised so that the material fills the pug-mill. If incomplete mixing is obtained when the pug-mill is raised so that its full capacity is being utilized, then the amount of material being fed into the pug-mill is too great and should be decreased (slow forward speed of the machine or reduce the size of the windrow), thereby increasing the mixing time. Regardless of the type of traveling plant used, complete mixing is seldom, if ever, accomplished by the plant. It is necessary to complete the mixing with blade-mix methods even though a traveling plant is used.

Plants which depend on a uniform forward speed and a uniform windrow to proportion the mixture properly, present more variables in operation, which must be given close consideration if satisfactory mixtures are to be obtained. It is absolutely necessary that uniform windrows of material be provided as the plant passes over the windrow. The volume of material shall be controlled by restricting the size of windrow which will permit the plant to mix adequately without decreasing its forward speed. No appreciable amount of dry material shall be left on the subgrade. No slippage of the tracks of the tractor shall be tolerated.

A sufficient number of mixing paddles shall be reversed to retard the flow of material through the mixing chamber to insure as near complete mixing as is practical. On down-grade it is usually necessary to have fewer paddles reversed to retard the flow, and on upgrades more retard paddles should be used than are normally used on level grades. When down-grades are encountered, the position of the retard paddles should be changed at the first sign of track slippage or reduction of forward speed. Likewise on up-grades, the position of the retard paddles should be changed as soon as an incomplete mixture is detected.

After the plant has been calibrated and is operated satisfactorily to give the desired proportions, the forward speed shall be measured. The forward speed shall then be checked frequently to detect any variations and adjustments made to maintain a constant, uniform speed. The evening of the windrow ahead of this type of plant is of utmost importance. Equalizing should closely precede the mixer in order to rectify any variations due to rainfall and subsequent drying operations. An operation log shall be kept, and the actual proportions checked and

documented frequently to insure that proper proportioning is being obtained at all times. As previously stated, traveling plants do not produce a complete mixture and mixing must be completed with blade-mix methods.

4.06.08 CENTRAL PLANT MIX METHODS

Specific types of base courses will require a central mixing plant capable of combining aggregate, water and calcium chloride, if required. Water shall be added during the mixing operation in the amount necessary to provide the approximate moisture content as determined by the Engineer for compaction. The Contract Documents show the method of measurement and basis of payment for water.

If more than one aggregate is combined, the individual gates on the feeders must be calibrated to assure the proper percentage of each aggregate.

When calcium chloride is specified, a great deal of effort is needed to keep the required pounds per ton ratio. A definite system of checks correlating sack count of calcium chloride to scale weights should be established and maintained. Calibrated metering systems should be encouraged, but must be checked against the weights of material delivered and used each day. When using dry calcium chloride, special care must be taken to monitor the gate settings because they are influenced by the relative humidity conditions which typically change throughout the day.

A daily record of the amount of calcium chloride, cement and water used should be maintained. The percentage of calcium chloride, cement and water should be computed on a daily and an accumulated basis.

4.06.09 AERATION

Typically, aeration is only required for material which is mixed in a windrow. Base courses which contain MC or RC asphalt may become tacky through loss of volatiles before laying is started. A certain amount of the volatiles originally contained in the oil must be removed before the mixture will bond together and lay satisfactorily without rutting and shoving. Over aeration will result in a mixture that will be difficult to roll into a smooth mat. Aeration is accomplished by continued mixing with blades and tillers. The amount of aeration desired will vary with asphalt from different sources and it is intended that the specification limits cover this range of aeration. It is important that for each type of asphalt, sufficient aeration shall be attained to prevent rutting and shoving of the laid material, and at the same time to guard against over aeration which will produce a dry, brittle base.

4.06.10 LAYING AND COMPACTING

As a minimum, line stakes should be set at a uniform distance from the edges of all base courses and sub-bases on each side and at intervals of 100 to 300 feet on tangent sections, and as little as 25 feet on sharp curves. The use of forty-penny or sixty-penny nails with red flagging attached is better for this purpose than stakes as the nails allow the equipment to work over them without obliterating the line, and they remain to assist the operators in laying subsequent lifts and provide a line for checking the alignment of the finished base.

Laying, compacting and finishing shall be completed as directed in the Contract Documents for the base material being used.

It should be kept in mind that the finished surface of the base course in many cases is the riding surfaces, and the final surface of the project depends to a great extent on quality of base

obtained. Sub-bases and underlying lifts of the base course need not present excellent riding qualities but when constructed properly and finished to their proper crown and grade, add appreciably to the final qualities of the project. The Inspector shall be constantly on the alert to detect any faulty alignment, crown or other defects which will impair the riding qualities or appearance of the finished surface. Laxity in laying any lift will result in a concentrated effort on the final lift to overcome all deficiencies and will only lead to mediocre work. In laying the final lift, the crown, grade and alignment shall be diligently checked.

The edges of the base may be cut to line by means of specially constructed shoes, conforming to the edge slope of the base on the angle at which the blade will be operated, or if the slope is flat enough, the edge slope may be cut with the heel of the blade.

If each step in the laying and finishing of bases and sub-bases is properly considered by the Inspector and the Contractor, there will be little need of wasting material over the side to obtain the specified line, grade, crown and riding surface on the finished base course.

4.06.11 CURING AND MAINTENANCE

Curing is an extremely important factor in the satisfactory construction of a base course or sub-base; especially those of the waterbound type on which a bituminous surface is to be constructed. The specifications for curing are based on the retained moisture content for most types of bases. Others are based upon the time required for the chemical reaction (curing) to take place. Note that cool temperatures slow the reaction rate, and thus require a longer curing period.

While the maximum moisture content at the time of priming for waterbound bases is specified, it is desired to decrease the moisture content of the base as much below the maximum specified as is possible under existing conditions. Base courses or sub-bases which are to be primed with bituminous material should be primed before serious raveling takes place. The prime coat, if applied when the base or sub-base is adequately cured, will prevent the penetration of surface moisture into the base and will also prevent severe pitting and raveling of the surface.

Portland Cement Treated bases can normally be covered during the cure period with moist earth, moist burlap, polyethylene sheeting or a bituminous material. However, if the gradation of the base is open to provide a “drainable base", the base should not be covered with anything that will plug the base.

4.06.12 SHOULDERS, ENTRANCES AND SIDEROADS

Shoulders, entrances and sideroads shall be constructed to comply with the details shown in the Contract Documents. In general, all construction work will be done prior to any bituminous surface treatment. If the Contract Documents do not require any shouldering, the slope shall be bladed uniform from the ditch bottom to the top of base. It is desirable to complete the house entrances and sideroads with the same surface as the adjoining roadway.

Entrances and sideroads should slope away from the base and be of such radius to allow traffic to enter and exit safely. It may be advisable to recommend some adjustment in quantities to properly complete these items.

4.07 LIGHT TYPE SURFACING

4.07.01 GENERAL

This type of work consists of the placing of aggregates for surfacing in a uniform windrow, and may include the spreading of the windrow material as shown in the Contract Documents or as directed by the Engineer.

4.07.02 EQUIPMENT

When the surfacing material is being measured by the ton it is not necessary to compute the volume of the truck beds. The Inspector should satisfy himself that the scales are accurate and that a satisfactory method of documenting the material used is established in accordance with the latest documentation procedures. All moisture in the material, as determined by the KT-11 methods, shall be deducted from the final quantity. The Contractor will be allowed to increase the specified rate to compensate for any moisture correction that is assessed.

If the material is being measured by the cubic yard, the Inspector must measure and compute the volume of the hauling vehicle. The volume of each vehicle shall be computed and recorded in accordance with latest documentation procedures.

4.07.03 CONSTRUCTION PROCEDURES

Normally, the preparation of the subgrade is not part of the contract. However, the Contractor should not be allowed to deliver material when hauling causes unnecessary damage to the road surface.

The Contractor shall be required to windrow the surfacing material in accordance with the Contract Documents. The windrow should be maintained so as to drain properly. Drain openings should be cut at low places in the grade. On superelevated curves, the windrow should be placed on the high side of the curve.

It is extremely important that the safety of the traveling public be considered at all times, and that the proper traffic control devices are maintained. Any unsafe driving or dumping procedures should not be tolerated. The windrow should be bladed into its proper position as soon as possible, and the material should always be windrowed prior to nightfall. No equipment shall be allowed on the roadway before sunrise, or later than sunset, or at any time vision is obscured due to lack of natural light.

4.08 ROADSIDE IMPROVEMENT

4.08.01 GENERAL

The Construction Engineer shall be in overall charge of the project. He will see that the project is completed in accordance with the Contract Documents. He will work with the Landscape Architect in all items concerning the location and acceptability of all roadside improvement items.

4.08.02 DELIVERY OF PLANT MATERIALS

The Landscape Architect may inspect and recommend acceptance or rejection of all plants, topsoil, mulch and miscellaneous materials for roadside improvement projects. It is the Contractor's responsibility to notify the Inspector 24 hours in advance of delivery so arrangements can be made for inspection. The proper procedures for protection of "bare-root" materials shall be established for each type of plant by the Landscape Architect. The instructions

given for "heel in," "puddling," etc., shall be carried out by the Inspector. Weather conditions will dictate the degree of protection necessary to properly protect the material prior to planting.

The Inspector shall keep a complete record of the plants delivered, the number accepted and planted or rejected. A positive procedure should be established to insure that none of the rejected materials are returned to the project. It is expected that during the progress of large projects, the Inspector may request inspection of the plants as they arrive and are planted. This requires close contact between the Landscape Architect and the Inspector to solve any questions that may arise and to insure that no inferior plants are planted. If the exact species of plant shown on the plans is not available, the Contractor may obtain approval for substitution by submitting a letter from three competent sources to this effect noting unavailability of item specified and proposed substitution. The substitution will normally be a similar variety of plant at no additional cost to the KDOT.

4.08.03 WORK PREPARATORY TO PLANTING

The Landscape Architect and the Inspector may work together in staking out the project. On large projects, the Contractor will normally have a crew digging holes far ahead of the planting. It is therefore necessary to stake each individual tree or shrub as many will have different hole sizes. The Contract Documents require a hole size for each item; therefore, each hole must be checked for diameter and depth prior to filling with topsoil or planting. When topsoil is shown on the plans, it must be approved in advance. The method of measurement must be agreed upon by the Inspector and the Contractor. Normally, there are two approved methods, the first being to measure the truck and issue cubic yard tickets as the soil is delivered to the tree holes. If this is done, the Inspector must be assured that the paid volume is not wasted, washed away or used except to fill the hole. The other method is to use the measured hole for the paid volume. The latter method will usually cost the Contractor extra topsoil, but may be an advantage to him because he will be less restricted in his hauling and stockpiling of topsoil. When peat moss is specified the method of mixing shall be established at the Pre-Construction Conference. One procedure is to place the specified quantity of peat moss on the given area, till it to the depth of existing soil that will give the required mixture and use the mixture to backfill the pits.

4.08.04 PLANTING TREES, SHRUBS AND VINES

The Contract Documents give the requirements for handling and planting the accepted plants. The Inspector should frequently inspect the planting operations and advise the Contractor of any changes in procedure necessary for the proper establishment of the plants.

Trees, vine and shrub pits shall be backfilled to the proper planting depth and firmed by trampling or with tamping tools. This operation is necessary to remove air pockets around the roots and should not be overlooked. It is necessary to study the terrain of the land to determine the proper planting depth. Deep planting is a common fault of inexperienced planters and is one cause for many transplants dying. In heavy soils or poorly drained areas, it is often advisable to provide a mound instead of a depression around the plants. Care should be taken to spread the roots of plants while backfilling and to firm the soil around the roots. The handling of B & B plants is outlined in the Contract Documents. The Inspector should reject any plants that have been damaged by careless handling. This would show up as trees that are loose in the ball, broken or crushed balls, or any other damage that would decrease the chance of making a satisfactory plant. Many B & B plants are now tied with plastic twine. Be sure that this twine is

cut from around the main stem of the plant. This should be done after the plant has been set in the hole and partially backfilled. Wire baskets used on large balled trees may be partially removed after planting.

It is considered good practice to water the plant when the backfill is ¾ complete and as often thereafter as necessary. Cultivating an area outside the pit, providing a cup or depression, fertilizing, mulching, staking and wrapping trees as provided in the Contract Documents shall be carefully supervised by the Inspector. When staking bare root trees, it is desirable to place the stake prior to planting the tree. This will prevent the stake from damaging the roots. The Inspector shall check the acceptability of methods and workmanship, and advise the Contractor of any changes in operation to improve the quality of protection of the plant.

4.08.05 PLANTING SODS AND SEEDS

Sods shall be laid on prepared soils and properly maintained. It is the Inspector's responsibility to see that this work is performed in a satisfactory manner. Dry soils should be watered prior to laying sods. The edges of sods shall be covered with soil to prevent drying. Proper grade lines shall be provided before laying the sod. Sods shall be in good growing condition at the end of the 20-day maintenance period to be acceptable.

Soil preparations for seeding shall provide for good seed soil contact. Seeding on poorly prepared seedbeds increases the chance of failure. When seeding is done on a newly graded roadside, the soil shall be properly disked and harrowed to eliminate all existing weeds and grassy growth. Normally, seeding shall be done with an appropriate drill for grass seed, a fertilizer box or attachment may be utilized to drill fertilizer as grass seed is planted.

All seed and fertilizer shall be drilled, except on small or rough areas where a drill cannot operate. In urban areas such as lawns, drop seeders, cyclone seeders, etc., may be used. The area will require light raking to provide cover for the seed.

It is not necessary to till the soil to bare ground in all seeding operations. When temporary cover has no erosion, the soil is highly erodible, stable slope areas or over-seeding a previous seeded area, seeding may be done with a no-till drill. This equipment is designed to drill seed into existing cover without tilling. Minimal damage is done to existing cover.

On all seeding projects, the drill rows shall run perpendicular to the slope when possible. This will help prevent rivulets of erosion down the slope. Small seed such as bluegrass, lovegrass and dropseed shall be planted shallow. When seeds are broadcast, cover shall be provided by hand raking, harrowing, cultipacking or dragging.

The use of a hydroseeder may be used on a project only if approved by the Inspector. Generally, hydroseeding will not be approved.

Many projects include wildflower seed in the native grass areas. Wildflower seed shall generally be broadcast over the area after the grass seed has been drilled. This may be done either before or after the mulch has been applied, but prior to punching the mulch. The wildflower seed will be covered as the mulch is punched. Minimal cover of wildflower seed is desirable.

4.08.06 MULCH

Mulch requires firming or tying in some manner as described in the Contract Documents. Where a "Mulching Tiller" cannot operate, some other suitable method shall be used to "stabilize" the mulching material. There should be no payment for areas of mulch not properly firmed or stabilized.

Mulch quantity may be reduced or eliminated on projects seeded with a no-till drill. The extent of existing cover will dictate the use of mulch. A tackifier or hydraulic slurry may also be used to tack the mulch down. Mulch shall not be punched when a no-till drill is used. On projects where the plans do not require the no-till method, and it is determined by the Inspector or the Landscape Architect after the letting that this method should be used, then a new price for mulching will need to be negotiated with the Contractor.

The Inspector shall see that the Contractor places the mulching material soon after seeding. If rains prevent completion of mulching a slope or given area until soils dry, the mulching should be continued as soon as is possible. After a delay of 7 to 8 days partial germination may occur. Mulching operations shall cease on the area where seedling grasses and legumes are emerging. The mulch would smother the seedlings that have emerged and the "Mulching Tiller" would cut out many seedling plants. If the Contractor keeps up with the mulching operations as the Contract Documents require, there will be few instances where mulch will have to be deleted.

4.08.07 PARK STRUCTURES

The Plans generally list the work to be done, such as site grading, materials to be used, lumber requirements, painting and many other details. The notes on the plans are usually detailed. Special effort must be made by the Inspector to insure that the details are not overlooked. Some Contractors may be careless about earthwork such as compacting earth under concrete slabs, backfilling around structures and other related items. Specific compaction requirements may not be specified; however, good construction practices should be followed. The fill areas should not contain excessive amounts of vegetation. The fill under and around concrete structures should be discussed in advance of construction, and a method agreed upon that will give the desired quality of work. The plans should be carefully followed on waste stabilization pond (lagoon) construction. These plans have been reviewed and approved by the Department of Health & Environment. Any changes from the plans should be reviewed with the Landscape Architect. Prior approval of changes in plans must be received. When lagoon construction is completed, notify the Landscape Architect so that arrangements for final inspection by the Department of Health & Environment may be made.

4.08.08 ACCEPTING MATERIALS

Items such as seed and fertilizer that require a materials test report or certification shall not be used or planted until the Inspector receives a test report or Certification showing that said items have been tested and accepted in accordance with Contract Documents. Many roadside improvement and general building project items are not covered by specific detailed Standard Specifications. Commercial grade items normally used for the use intended on the project are acceptable. All materials, equipment and fabrication items shall have catalog cuts, setting drawings, schedules, etc., submitted for approval by the Landscape Architect. A letter of transmittal shall accompany all submissions. No items shall be installed without approval.

Visual inspection will be made of most types of plant materials, mulch, sod, guideposts, topsoil, etc. Trees, shrubs, vines and sod often appear to be in good condition when delivered and planted, but are in poor condition when final inspection is made. A number of conditions might contribute to such items being in an acceptable or unacceptable condition. The Inspector shall advise the Contractor to give such care or attention to the various plants that will keep them

in a satisfactory condition. Plants that are definitely in a dead, or in a dying and unsatisfactory condition shall be removed and replaced with good live plants by the Contractor.

If deemed necessary, the Inspector and Landscape Architect shall examine the plants and items of work on the project at the end of the establishment period specified in the contract. Inspection shall be made of the quality of work performed and the condition of the plant materials. Items that are in a dying condition shall be replaced with good quality plants. In case it is so late in the season that transplanting is not advisable, the items rejected shall be replaced during the following planting season. A list of items to be replaced and a description of the remaining work to be done to put the project in an acceptable condition shall be completed by the Inspector and furnished to the Contractor.

The final inspection and acceptance of a project will be made by the District Construction Engineer.