Table of Contents
CHAPTER 11: SURVEYING

1101 GENERAL INSTRUCTIONS

1102 CHECKING OF PLANS

1103 FIELD BOOKS4
1103-1 GENERAL
1103-2 TRANSIT BOOK
1103-3 GRADE BOOK

1104 ALIGNMENT CHECK AND REFERENCE POINTS

1105 PRESERVATION OF MONUMENTS AND MARKERS
1105-1 GENERAL
1105-2 MONUMENTS, EXCEPT U.S.G.S. OR U.S. COAST & GEODETIC SURVEY
1105-3 MONUMENTS, U.S. GEOLOGICAL SURVEY AND U.S. COAST & GEODETIC SURVEY

1106 CHECK LEVELS AND BENCH MARKS

1107 CONSTRUCTION STAKES

1108 STAKING STRUCTURES
1108-1 GENERAL
1108-2 PIPE CULVERTS
1108-3 CONCRETE BOXES AND BRIDGE CULVERTS
1108-4 LARGE STRUCTURES (BRIDGES)
1108-5 STRUCTURES ON CURVES

1109 SLOPE STAKES
1109-1 GENERAL
1109-2 ROADWAY CROSS SECTIONS
1109-3 CROSS SECTIONS IN CUTS
1109-4 CROSS SECTIONS IN FILLS

1110 DRAINAGE STAKES

1111 MATERIAL PITS

1112 MISCELLANEOUS CONSTRUCTION STAKES
1112-1 RIGHT-OF-WAY FENCE
1112-2 CATTLE GUARDS
1112-3 GUARDRAIL
1112-4 BANK PROTECTION

1113 GRADE STAKES (BLUE TOPS)

1114 REMEASUREMENT
1114-1 GENERAL
1114-2 SLIDES
1114-3 OVERBREAKAGE

1115 COMPUTATIONS
1115-1 GENERAL
1115-2 AVERAGE END AREA
1115-3 OVERHAUL
1115-4 MASS DIAGRAM

1116 SURVEY TASK LIST

1150 CONTRACTOR CONSTRUCTION SURVEYING
1150-1 GENERAL INSTRUCTIONS
1150-2 STUDY AND CHECKING OF PLANS

1150-3 STAKING STRUCTURES
1150-4 SLOPE STAKES
1150-5 DRAINAGE STAKES
1150-6 MISCELLANEOUS CONSTRUCTION STAKES
1150-7 GRADE STAKES (BLUE TOPS)

1151 GLOBAL POSITION SYSTEM (GPS) AS-BUILT OF PROJECT

REFERENCES

BLANK FORMS
There are no blank forms associated with this chapter at the present time.

1101 GENERAL INSTRUCTIONS

The intent of this chapter is to present a series of guidelines and staking methods which will assist field personnel in construction surveying.

Additional information should be sought in the ADOT *Engineering Survey Services Manual for Field Surveys*. The Manual will explain how and when different survey methods and instruments should be used. All transits, theodolites, etc., will be referred to as instruments in this Manual since they are thoroughly discussed in the *Engineering Survey Services Manual for Field Surveys*. The Manual also illustrates field book notation and how electronic data files should be handled.

The methods for note preparation and staking procedures outlined in this chapter are presented only as acceptable methods of doing the work. The method selected for each phase of the construction survey must be determined by the Resident Engineer and the Contractor in conjunction with the Surveyor as each project may vary considerably in requirements.

Construction survey work should start before construction operations begin in order to avoid delay in the Contractor's operations. It is very important that the Resident Engineer and his or her(s) staff acquaint themselves with the Contractor's staking plan and give the Contractor formal approval before any staking begins. The Contractor's staking plan should be referenced throughout the project to assure that the Contractor is following this plan.

1102 CHECKING OF PLANS

As soon as approved construction plans are available, and before any staking is started, these plans should be checked by the Survey Supervisor or Office Supervisor as directed by the Resident Engineer.

The following check list is included to assist the checking procedures:

- Geometrics: all parts of the plans pertaining to control such as curve data, both horizontal and vertical, must be checked;
- Roadway plan and profile sheets: location of all existing utilities, correct station for all crossroads, etc.;
- Structural sheets: check elevations from finish grade to bottom of footings on all major structures;
- Drainage plans: catch basin locations and elevations, storm drain conflicts with sewer or irrigation lines, and pipe location and slopes;
- Signing and lighting sheets;
- Lighting and traffic signal sheets;
- Right-of-way plans;
- Standard Drawings and Notes on plans; and
- Special Provisions.

1103 FIELD BOOKS

1103-1 General

The preparation of field books and recording of field measurements are important parts of the survey operation. Keep in mind, these notes may serve as an official source document and basis of payment to the Contractor.

All field notes shall be recorded in standard field notebooks unless an electronic data collector is used. Never use loose-leaf books or pads for permanent records. Neatness and clarity are of utmost importance in the preparation of field notes. When preparing notes, provide sufficient detail and information to enable those who are not familiar with the project to easily understand what has been documented. Too much detail is far better than too little. Never crowd survey notes; paper is relatively cheap.

Errors made in recording field notes should never be erased. Draw a line through the erroneous figures and place the corrected figures directly above. When necessary to make revisions in notes, the abandoned notes should not be destroyed but crossed out and reference made as to the book number and pages where revisions appear. When corrections are made, the individual making these should date and initial each change.

Each book should have pages numbered only at the top of the right hand sheet and the contents indexed on the first page. The date, weather conditions, and survey crew personnel shall be shown at the beginning of each day's notes. The person in charge of making the survey or recording the measurements shall sign the end of each days notes and on each page containing the results of any measured item.

All construction records shall be plainly marked for identification with the contents, route, project number, stations, name of engineer, and year. They shall be turned into project records when complete.

Survey data may also be collected using an electronic data collector. When survey data is collected electronically, it should be turned into the Transportation Engineer Team Leader on the original diskette. It may also be appropriate to send a copy to CADD/Mapping. Refer to ADOT *Engineering Survey Services Manual for Field Surveys* for additional information.

1103-2 Transit Book

Before staking is started, and after checking of plans and control points, a transit book shall be prepared. A well-prepared transit book is a valuable tool to the staking party.

Avoid inadequate information caused by crowded notes. Leave sufficient room so that the survey party may record other pertinent information. An accepted method of listing information in the transit book is as follows:

Obtain from the plans the engineering station at the beginning of the project. This station number shall be inserted in the first column on a line near the bottom of the third or fourth left hand page from the front of the field notebook. Next, list the stationing up the page consecutively from the beginning station on about every fourth or fifth line. Then enter the station of all transit points shown on the plans, such as P.O.T. (point on tangent), P.I. (point at intersection), P.C. (point of curvature), P.T. (point of tangency), or in the event of spiraled curves, T.S. (tangent to spiral), S.C. (spiral to curve), C.S. (curve to spiral), S.T. (spiral to tangent), and alignment equations at the proper place in the book according to station number. After all stationing and control points are in the book, enter all basic information pertaining to the main curve and spirals on the left hand page, opposite the P.I. station of the main curve. The right hand page shall be used to diagram any

reference ties opposite the appropriate station of the left hand page. The centerline station of any structure, right-of-way marker or other tie should be indicated in the book in order that these points may be established as the line is being run. Compute all curve deflections and notes just to the right of the station to which they apply. The first chord of the curve or spiral shall be the distance from the P.C. or T.S. station to the first even station or plus 50 feet (15 meter) station. Curves shall be computed using chords with a maximum of 50 feet (15 meters) in length. Any curve greater than 6 degrees shall be run with 25 foot (7.5 meter) chords or shall be run using 50 foot (15 meter) chords with the necessary chord correction applied. These corrections may be obtained from most survey texts.

1103-3 Grade Book

The grade book is prepared in order that the survey party may readily provide the Contractor with the necessary construction grades to properly construct to the requirements of the plans.

This book shall contain all computed and checked grades necessary to provide elevations for crosssectioning, staking of structures, blue topping, and any other elevations necessary to complete the project. Centerline ground elevations should also be shown.

Grade elevations should be computed along the roadway centerline at a maximum of 50 foot (15 meter) intervals and recorded in the grade book. Grades should also be computed and recorded at intermediate stations necessary to facilitate the staking of structures and at other breaks necessary in cross-sectioning.

The type of design relative to your project can be readily obtained from the typical sections shown on the project plans. All points of change in transverse crown, slope or super-elevation, as indicated on the typical sections, should be recorded in the grade book.

Extensive checking of vertical alignment, including vertical curves, should be done before the grade book is prepared.

Begin at top of page three (3) at the left hand side, with the station of the first grade break back of the beginning of the project and enter all stations and plus 50 foot (15 meter) stations down the page, leaving one space between each entry. In the column just right of the stationing enter the vertical curve data, such as length of curve, percent of grade, beginning and end of curve and indicate P.I. of vertical curve. In the third column enter the tangent grade elevation as computed from the plans.

The fourth column is reserved for the computations of the vertical curve corrections for each station in the curve. Column five will contain finished grade elevation which is the tangent grade plus or minus the vertical curve correction. Column six will indicate the subgrade elevation. This elevation is the finished grade elevation minus thickness of base and surfacing material. Base and surfacing material thickness changes may also be noted in this column.

The right hand side of the book shall contain rate of super-elevation as indicated on plans, beginning and end of transitions or super-elevations, rate of crown or slope and any other information necessary in staking a project.

1104 ALIGNMENT CHECK AND REFERENCE POINTS

All centerline control points set by Department location survey crews should be located and properly referenced in order that they may be re-established at any time during construction. A proper method of referencing these points is indicated on Exhibit 1107-1, Reference of Control Points.

As centerline control points are being established and referenced, the construction survey centerline should be staked. Stakes shall be driven on the centerline, with the station marked on the side facing the initial station of the survey; on tangents, stakes shall be placed on even stations and plus 50 foot (15 meter) stations. On curves it may be advisable at times to stake at 25 foot (7.5 meter) intervals.

1105 PRESERVATION OF MONUMENTS AND MARKERS

1105-1 General

Horizontal and vertical survey controls have been placed at numerous locations throughout the State by several Federal agencies. These controls are survey monuments in the form of a concrete monument or an iron pipe with a brass cap. These agencies are the Bureau of Reclamation, Army Map Services, Corps of Engineers, Forest Service, U.S. General Land Office, Geological Survey, and the Coast and Geodetic Survey; markers of the last three being those most frequently encountered federal markers. There are also survey markers set by state, county, city and other local jurisdictions and by utility companies and professional land surveyors in the private sector. These could be brass caps, iron pipes, steel bars, rebar or just a railroad spike or large nail.

Every effort must be made to recover, protect, and preserve all such monuments, whenever and wherever found. Federal and State laws provide penalties for the negligent disturbance of all such markers and monuments. As provided in ARS 33-103 such penalties may also include the cost of surveying to reestablish the monument or marker and as a result can become very expensive.

Location crews, as a part of their preliminary engineering activity, will have located and made ties to all monuments which they were able to locate in the vicinity of the proposed work. In the case of U.S. Geological Survey or U.S. Coast and Geodetic Survey monuments, the Chief Location Engineer will have made arrangements for their relocation. This relocation will be accomplished by the Federal agency involved and/or Photogrammetry and Mapping Services prior to the beginning of any construction activities. These crews make diligent efforts to locate all in-place monuments but occasionally one may be overlooked. Refer to subsections 1105-2 and 1105-3 of this Manual in the event that construction crews locate a monument within the highway right-of-way or in an area where construction activities may disturb the monument and it has not been previously referenced.

1105-2 Monuments, Except U.S.G.S. or U.S. Coast & Geodetic Survey

If the marker is outside the proposed roadway prism, reference and erect suitable protective devices and flags to insure against disturbance during construction activities. Should it be disturbed, reset in original position upon completion of project.

If it is outside the proposed paved area but within the roadway prism, establish witness corners which will enable relocation of the marker position at any future time. These points shall be iron pins approximately 18 inches (0.5 meters) in length, imbedded in concrete. By use of an instrument, set up over the original marker, locate two witness corners on a straight line passing through the original marker. Locate the other two corners similarly on another straight line turned 90 degrees off the first line. Three points shall be set at a location where they will not be disturbed during construction activities. An accurate measurement from the monument to each witness corner must be made and the distance to each recorded as a permanent project record. Send a complete diagram of the referenced monument, in duplicate, to ADOT Location Division, Phoenix. The monument and its references shall be tied to the survey centerline stationing of the roadway.

If the original monument is within the proposed paved area, it shall be preserved with a Standard Drawing C-21.10 Survey Monument and Cover. If the original corner is one established by the U.S. Land Office, the following procedure shall be used: If a stone, encase in concrete, leaving the top exposed, drilling a small hole in the stone to mark the true point. If an iron pipe with a brass cap, imbed a portion of the pipe in concrete, letting the original brass cap substitute for the one indicated in Standard Drawing C-21.10. The brass cap shall be oriented to read from south to north.

1105-3 Monuments, U.S. Geological Survey and U.S. Coast & Geodetic Survey

In the event such a monument has been overlooked every effort must be made to protect it in its original location. Immediate notice of location of the monument must be sent to the ADOT Chief Location Engineer, Phoenix, giving a detailed description of the marker. Enclose an impression of the marker obtained by holding a sheet of paper tightly over the face of the disk and running a soft lead pencil across the area until the imprint is transferred. The Chief Location Engineer will make prompt reply as to the action which must be taken.

1106 CHECK LEVELS AND BENCH MARKS

Check levels must be run to verify the elevations of the bench marks shown on the plans. Check levels shall begin at the nearest original bench mark just outside the beginning station of the project. Bear in mind that all bench marks are turning points, and it is important that the level person turn through each bench as they are being checked. It is equally important that the rod person is provided with a peg book to check with the level person throughout the procedure of the work.

At the time check levels are being run, establish all necessary construction bench marks. See Exhibit 1107-2 for typical example of check levels. The bench marks, set on the location survey, establish the vertical control of the construction projects.

The plans show all location bench marks, but they are too far apart and not established at strategic places for construction work; therefore, the following are a few established practices that can be performed at the time check levels are run that will expedite the staking of a project:

1. Establish a bench mark at each end of a large structure; one bench mark at the high ground elevation and one at the low ground elevation of the structure. One bench is sufficient at a small structure.

2. Establish bench marks at frequent intervals and convenient locations for checking during cross-sectioning and setting of blue tops. As a general rule, a maximum of 500 feet (150 meters) between bench marks should be observed.

3. In rough terrain, establish bench marks at points of change from cut to fill and vice-versa or at high point of fill.

4. Establish new guard stakes at all old bench marks and all newly established bench marks. The back face of the guard stake will be marked with the abbreviation "B.M." and the B.M. number. The inside face will bear the actual elevation of the bench mark. The guard shall be driven over the bench mark at a slant with the inside face of the guard facing the iron pipe.

5. In placing new bench marks, a sound, firm ground location should be sought and a 5/8 in. X 18 in. or 24in. (1.6 cm X 0.5 m or 0.6 m) iron pin driven into the ground allowing approximately 2 inches (5 centimeters) to protrude. See Exhibit 1107-3 for marking of B.M. stakes.

1107 CONSTRUCTION STAKES

Throughout the work, the Surveyor should see that survey stakes are always provided far enough ahead to enable the Contractor to plan his work. The location and message transmitted by these stakes shall be recorded so that the stakes may be easily replaced if destroyed.

Use a beginner's drawing pencil to mark all stakes. The pencil should be blunt enough that sufficient pressure can be applied to impress the markings slightly into the wood. All writing on stakes shall be large enough for easy reading. Stakes shall be driven firmly into the ground.

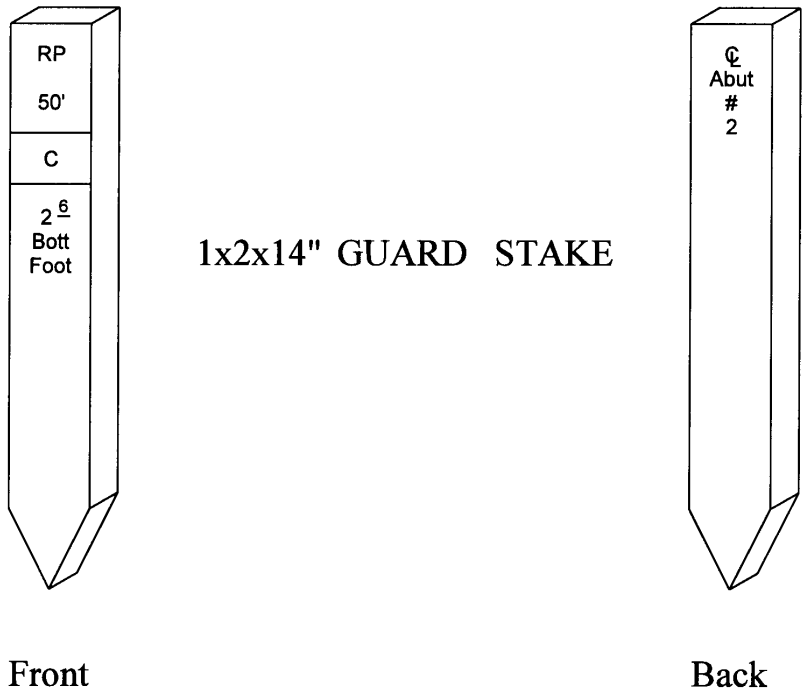

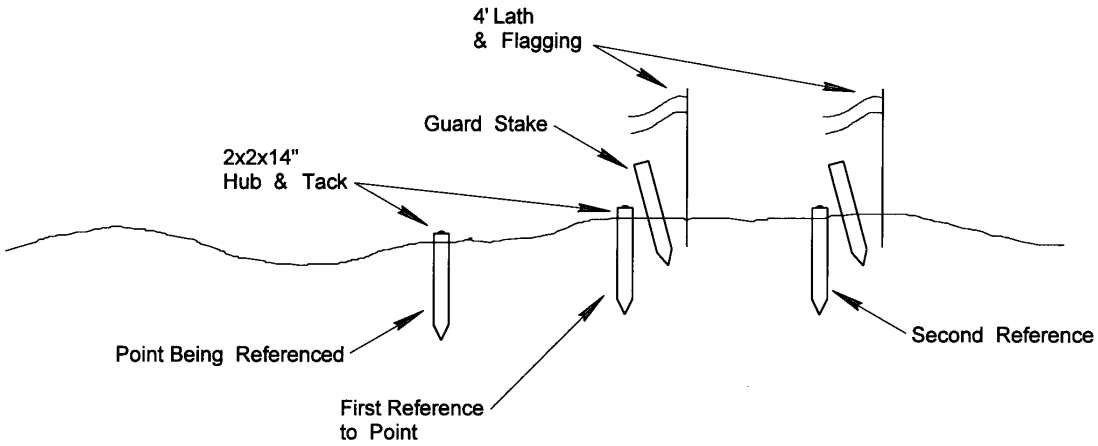

Exhibit 1107-1. References of Control Points

LOC	BS (+)	HI	FS (-)	ELEV	
BM #1	4.72	951.44		946.72	USGS BM Brass Cap in Conc 125' Lt Sta 127+50
TP	3.75	44.58	10.61	940.83	
TP	2.18	38.03	8.73	935.85	
BM #2	5.26	35.92	7.37	930.66	5/8" Iron Pin & Guard 100' Lt Sta 132+00
TP	4.61	32.56	7.97	927.95	
TP	0.21	21.64	11.13	921.43	
BM #3	9.20	20.49	10.35	911.29	5/8" Iron Pin & Guard 100' Lt Sta 137+00
TP	11.67	29.87	2.29	918.20	
TP	12.01	40.53	1.35	928.52	
BM #4			0.39	940.14	5/8" Iron Pin & Guard 100' Lt Sta 142.00
Σ (+)	53.61	Σ (+)	60.19	946.72	
			-53.61	-940.14	
		Diff	=6.58 ✓	=6.58 ✓	

Date 1-15-83

Exhibit 1107-2. Check Level Book

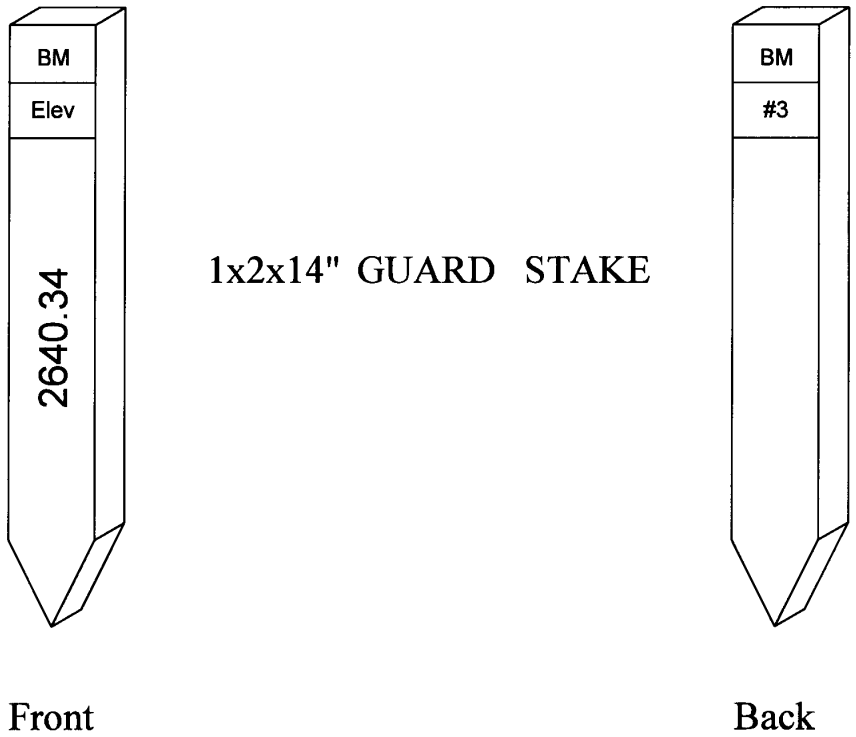

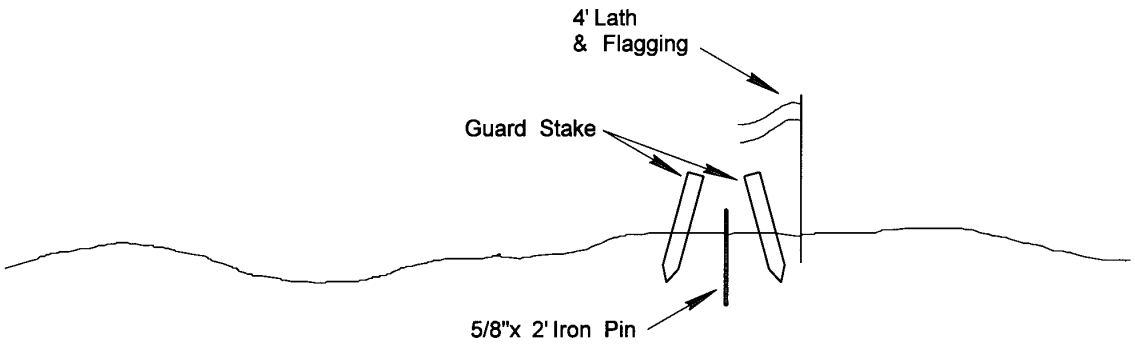

Exhibit 1107-3. Bench Mark Stakes

1108 STAKING STRUCTURES

1108-1 General

Considerable preliminary paper layout work and computing can be performed in the construction field office before ground layout of structures is started. The extent of the preliminary work will depend on the complexity of the structure.

Generally speaking, there are three distinct types of structures which will require staking. They are pipe culverts, concrete box culverts, and large bridge type structures. The following subsections are guides which may be used in the layout of these structures.

1108-2 Pipe Culverts

A study of the normal flow of the drainage should be made before staking is done. It is always possible that the normal drainage pattern may have changed between the time of design and construction which may require a change in the location of pipe culverts.

If possible, all pipe should be staked with length and alignment verified prior to the Contractor placing his order for the pipe.

In staking pipe culverts, in order to attain proper placement of the pipe, it is often necessary that the roadway sections adjacent to the pipe be slope staked. If this practice is employed, no error should occur in length or proper placement of the pipe. In the event that the slope staking cannot be done, the distance that the pipe should extend each side of centerline may be determined by plotting the pipe and the road, the cross-section at the structure location, and scaling the distance from centerline to each end of the pipe.

The centerline station through which the centerline of the culvert pipe will pass is located and marked with a stake or guinea. Set the instrument on this point, take a sight tangent to the centerline and turn the required angle for the centerline of the pipe. Along the line thus established, measure off the culvert lengths right and left of centerline and place a hub at each end of the pipe location.

After the two ends of the pipe are established, references to these points are set. If there is an inlet or outlet channel, or both, the pipe should be referenced to the sides. If no channel excavation is necessary, it is possible to reference straight out from the ends. With an elevation from the nearest bench mark, determine the elevation of the top of each reference hub, and compute the cut or fill from it to the flow line point at each end of the pipe. Behind each reference hub, set a guard stake on which has been marked the hub's identity, the offset distance, and amount of cut or fill from the reference hub to the flow line point.

Take necessary notes and make structural excavation diagrams in order to compute structural excavation. If drainage excavation is required, the inlet and outlet channels should be slope staked at the time the pipe is staked. (See Exhibit 1108-2-1.)

When elevations are provided to the Contractor for setting of pipe, or for any points on any structure, the level notes should record the bench mark elevation. The level circuit notes should always show closure on the same, or another, B.M. The purpose obviously is to reduce the chance of error.

In addition to pipe culverts, long horizontal pipe runs will also be staked for construction. These runs may go from manhole to manhole or to catch basins. These grades must be checked using manhole or catch basin inverts as the control and figuring the grade in between the structures. Pipe should be staked on an

appropriate offset line at no greater than 50 foot (15 meter) intervals. Where flow is critical, such as in sanitary sewer installations, then pipe should be staked with a cut to flow line of pipe every 25 feet (7.5 meters). A guard lath should be provided indicating cut to flow line, offset to the centerline of the pipe and station.

1108-3 Concrete Boxes and Bridge Culverts

The size and type of box culvert to be staked will be designated on the plans. Particular attention must be given to the type of wing walls called for on the plans.

Since concrete culvert stakes are used for more precise measurements than in the case with pipe culverts, the layout points are marked with hubs and tacks. Wingwalls are staked according to the standard drawing or special details designated in the plans.

Basically, the same method is used in staking box culverts as for pipe culverts. Additionally, stakes must be set to locate the intersection of the barrel and the back face of the wing and the end of the wing. Reference control lines for each wing wall and wing to barrel intersection point should be set using two tacked hubs appropriate distances outside of the construction area from the end of the wing, 15 to 25 feet (4.5 to 7.5 meters) are usually satisfactory. All tacked hubs shall be referenced as to the fill or cut to the bottom of the footing elevation.

Guard stakes shall be well marked. Box culverts should be checked for necessary revisions to meet drainage requirements. (See Exhibit 1108-3-1.)

1108-4 Large Structures (Bridges)

Prior to commencing the actual field layout of a major structure, considerable preliminary work is necessary. The first step should be a complete check of all distances and elevations shown on the plans. Likewise, all survey instruments should be checked and any necessary adjustments made.

It is always sound engineering practice to be certain that elevations given for bottom of footings and other elevations shown on the construction plans are computed correctly from finished grade down or from bottom of footing to finished grade.

After determining that the plans are correct, it is good practice to make a rough paper layout of how you intend to stake and reference the structure at the construction site. Exhibit 1108-4-1 will illustrate one acceptable method of laying out and referencing a structure of this type. Remember that all centerlines and bearing lines must be staked and referenced so that a minimum of time and effort are necessary in replacing any disturbed control lines as construction progresses.

After staking of the structure has been completed, a thorough check of all measurements, angles, and elevations should be made to make certain that no errors exist. This checking should, if possible, be done by a different party than the one which performed the original staking. Checking should be by a different method if practical to do so. An example of using two methods of staking the centerline of piers, bents, or abutments is:

1. Stake the original layout using the dimensions between the substructure units as shown on the bridge sheets of the plans.

2. Compute the station distances for the centerline of each substructure unit and locate them by stationing. Always make certain that the staking is correct, never take anything for granted when staking a bridge.

If the least doubt arises, consult the plans and double check. Verify the staking carefully and be certain that all distances, angles and elevations are correct, then go over the structure layout in detail with the Contractor to make sure he or she knows the purpose and location of each stake. Sufficient RP's shall be provided for such items as caissons so that drilling and cage placement may be checked throughout the installation process.

1108-5 Structures On Curves

Extreme care must be exercised in staking structures on curves. A very thorough study of the plans should be made before staking begins. In all cases, a layout of the structure should be made on paper. In some cases, it is also advisable to make an actual layout of the structure on level ground where measurements, staking, and checking of chords, angles, etc., are facilitated.

After being completely satisfied as to the controls needed and all measurements, angles, and elevations have been checked, and double checked, you are better able to proceed with an accurate layout of the structure. Layout staking of bridge structures must be checked by another method such as with rectangular coordinates which can indicate whether all the angles and distances close and provide diagonal dimensions.

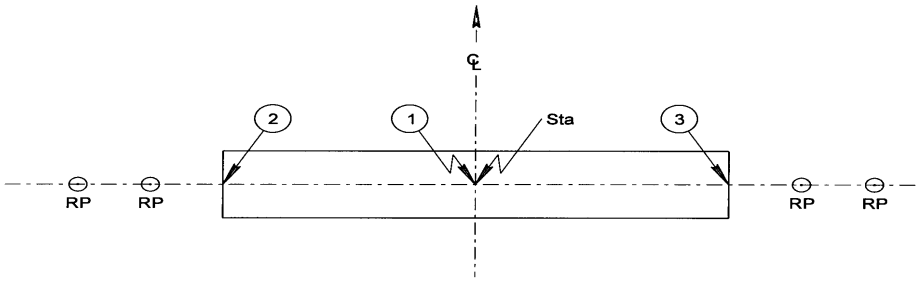

No Channel or Headwall

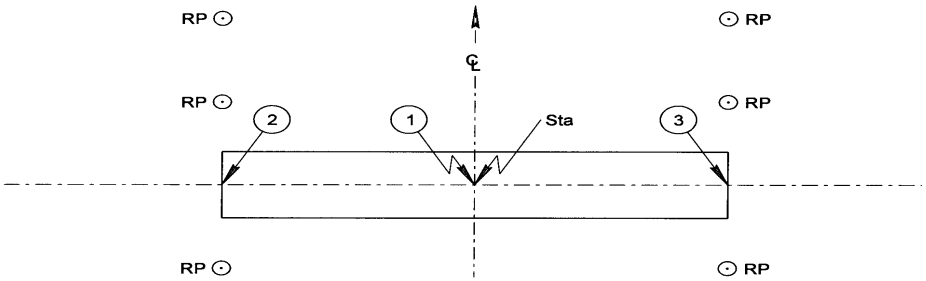

No Channel and/or Headwall

RP RP

RP - Hub & Tack with Guard Stake & Lath

Directions:

1. Establish station location at point where survey centerline and centerline of pipe intersect (point 1). Mark this point with stake and tack or nail.

2. Occupy point 1 with an instrument and backsight or foresight to control point on centerline. Clamp vernier and turn angle that pipe line forms with centerline of roadway. Chain Distances right and left of centerline as per plans or modified pipe lengths and set stake and tack at both ends of pipe (points 2 and 3). If pipe has no channel or headwall, references may be set to ends of pipe on this same line.

3. If pipe has channel and/or headwall the following reference procedure should be used: Occupy point 2 and sight point 3. Clamp vernier and turn 90 degrees. Set reference points with hub and tack at 10 feet (3 meters) and 25 feet (7.5 meters). After these references are set, re-sight point 3, turn 90 degrees to the opposite side and set similar references.

4. Move the instrument to point 3 and repeat procedure using point 2 as a backsight.

Exhibit 1108-2-1. C.M.P. OR Pipe Culvert Staking Layout

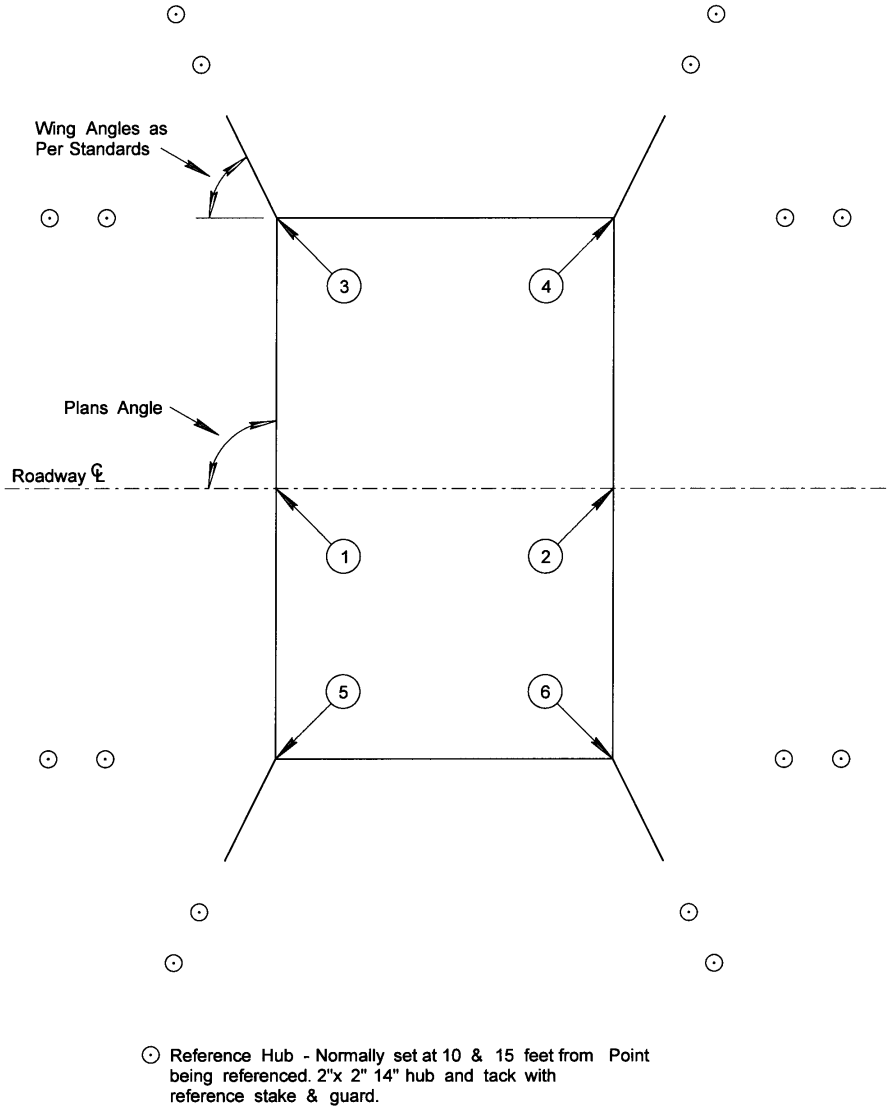

Directions

1. Locate by stationing the point at which barrel line intersects with roadway centerline (1). Mark this point with 1in. X 2 in. X 14 in. (2.5 cm X 5 cm X 36 cm) stake and tack.
2. From this point, establish other barrel line intersection (2) and set stake and tack.
3. Set transit over point (1), sight back to centerline control point and turn plans angle. Chain off required distance and establish points (3) and (5) with stake and tack.
4. Follow same procedure occupying point (2) and establishing points (4) and (6).
5. Having established points (3), (4), (5), and (6), the transit is moved to point (3) or (4) and the unoccupied point (3) or (4) is sighted upon and the vernier locked. Indicated references are then set to points (3) and (4). This procedure will be repeated with points (5) and (6).
6. Assume above occupancy was at point (3). After setting references required, the wing angle as indicated on the plans shall be turned and the end of the wing will be established with stake and tack and referenced with hub and tack. This procedure will be repeated occupying points (4), (5), and (6).
7. A quick measurement check of the layout should be made to make certain that structure is properly staked.

Exhibit 1108-3-1. Concrete Box Culvert Layout

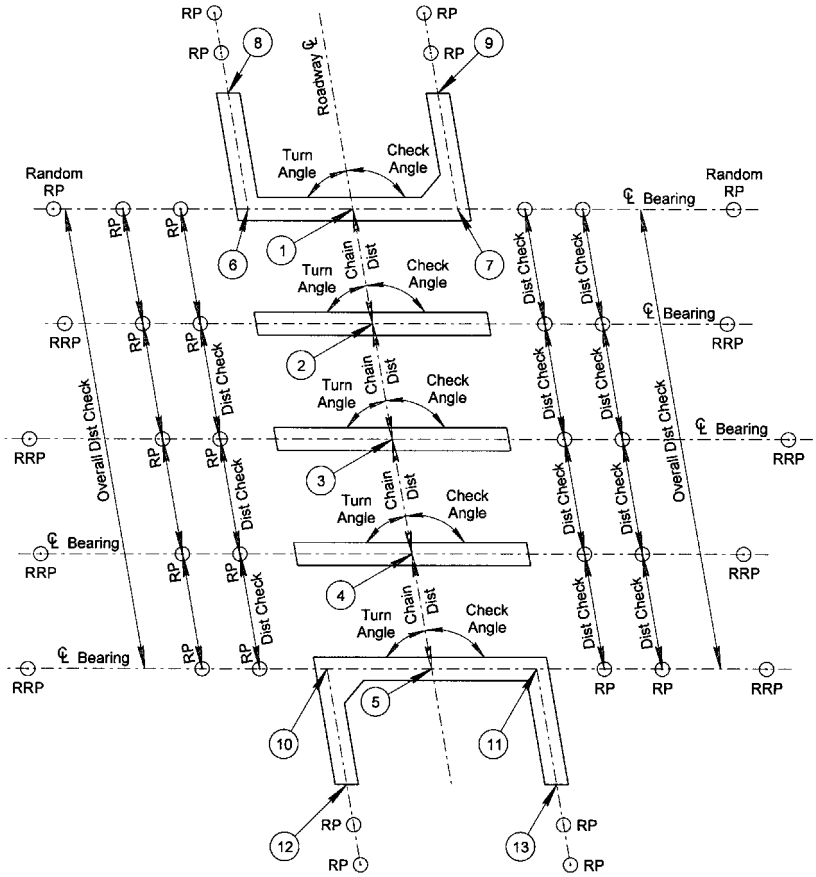

Directions:

1. Complete careful check of plans for dimensions and grades.
2. Establish point (1) by stationing. Occupy this point with transit. Sight transit on centerline control point and clamp vernier. From this, setup chain in and establish intersections of survey centerline and centerline of piers and other abutment. (Points 2, 3, 4, and 5.) These points should be set with 1 in. X 2 in. X 14 in. (2.5 cm X 5 cm X 36 cm) stake with tack. Carefully check the chained distance obtained from the plans each time. These distances must be to the nearest 0.01foot (3 millimeters).
3. After centerline intersection points of each abutment and each pier have been established, the centerline of each of these substructure units must be located and referenced. While occupying point (1), sight transit on point (5), or a chosen centerline control point, and turn angle as indicated by the plans. After turning angle measure and set stake and tack for each end of abutment points (6) and (7). Turn back to original sight point (5) or control point and turn check angle (difference between 180 degrees and plans angle). If this does not hit the tack set for each of the abutments, repeat procedure until points can be hit by turning either angle. After being satisfied that line is good, set 2 in. X 2 in. X 14 in. (5 cm X 5 cm X 36 cm) hub and tack references to each end of abutment.
4. After setting and referencing points (6) and (7), they must be occupied and the end of each wing set and referenced. The same procedure is used, checking angles and distances each time.
5. Continue ahead occupying points (2), (3), (4), and (5) repeating the same procedure.
6. After completion of staking layout, a check should be made. First, check distance between reference points to centerline of piers and abutments. These reference distances should not vary more than one one-hundredth (3 millimeters) from the chained distance at centerline. Next, chain the overall distances on each side of structure layout. This should be within one to two one-hundredths (3 to 6 millimeters) of plans length of the structure.
7. All reference points must have guard stake and flagged lath.
8. Caisson layout will have RPs in both directions so Contractor can set rebar cage with string lines.

Exhibit 1108-4-1. Large Structure Layout

1109 SLOPE STAKES

1109-1 General

Slope stakes may be placed prior to the Contractor clearing the ground in cases of open, grassy prairie, or cultivated land, where a minimum of clearing is required; otherwise, a clearing line should be established and the roadway prism should be cleared prior to setting of slope stakes, or as specified in the special provisions. Exhibit 1109-1-1 demonstrates commonly found slope staking placement codes.

1109-2 Roadway Cross Sections

Cross sections are taken and slope stakes are set for two primary purposes.

1. The sections recorded in a field book serve as a quantity pay document for work performed by the Contractor.

2. The slope stakes outline the cut or fill limits and the slopes to be built for the Contractor.

Cross sectioning and slope staking are usually performed at the same time. Usual practice is to cross section and stake at all full and 50 foot (15 meter) stations and at all breaks in topography within the roadway section that will effect the calculation of the volumes of excavations and embankments. In desert or reasonable flat terrain, slope stakes, and cross sections may be spaced at 100 foot (30 meter) intervals. (See Exhibit 1109-2-1 for cross section computations).

Slope stakes need not always be set at every cross section, however, all the information needed for calculating quantities must be indicated in the notebook.

Measurements shall be from the centerline and shall be noted in the field book for computations. (See Exhibit 1109-2-2, Roadway Cross Section Book.) In setting slope stakes, the rod is read to the nearest 0.1 feet (3 centimeters) and horizontal distances measured with a metallic tape (if required) at right angles to the survey centerline also recorded to the nearest 0.01 feet (3 millimeters). In heavy work on steep hillsides, special care shall be taken in reading the rod and in setting slope stakes at right angles to the centerline and also in properly measuring the horizontal distances from the survey centerline to the point where rod readings are taken and where slope stakes are set.

The use of hand levels and the Rhode's Arc should generally be limited to determining elevations of inaccessible locations because elevations taken by this method are not as accurate as elevations read with the engineer's level. In rough terrain, parallel profile levels outside of the slope stake lines may be used to check hand level work. It is recommended that electronic instruments are used for this application to increase accuracy.

1109-3 Cross Sections in Cuts

The centerline stake will be marked with the station facing the beginning of the project. The opposite side of the centerline stake shall be marked with the vertical cut which is the vertical distance from the original ground at this point to the construction grade. This cut will be the difference between the centerline profile elevation and the plans subgrade elevation. All significant breaks in the ground surface and all breaks in the construction grade template are to be recorded in the cross section field notes. A slope stake shall be set where the cut slope intersects the existing ground surface. (This is known as the "catch point".) The slope stake will be marked on the back side with the appropriate stationing. The inside of the slope stake will bear

the letter "C" (indicating that a cut is to be made, the amount of cut to be made at that particular point, the horizontal distance from the centerline to the slope stake, and the slope ratio).

During the excavation operation, the life of a slope stake is short due to equipment operation. Therefore, a reference to each slope stake in a cut section should be set as follows:

- A guinea shall be driven flush with the ground, outside the slope rounding area, and preferably at an even horizontal distance from the slope stake; a 10 foot (3 meter) offset is usually adequate; if not, additional increments of 10 feet (3 meters) is suggested.
- A guard stake shall be driven behind the guinea. (A guinea is a small stake driven flush with the ground surface.) The back side of the guard stake shall show the station of the section. The front side shall show the cut at the slope stake and the horizontal distance from the slope stake to the reference.

Slope rounding shall be staked to conform to the roadway standards when slope rounding is required. (See Exhibits 1109-3-1 and 1109-3-2)

1109-4 Cross Sections in Fills

Rod readings and horizontal distances should be recorded at all significant breaks in the ground line in fills and in cut sections. In most cases, it is not necessary to offset the fill slope stake except where the fill will catch on a traveled roadway. In this event, a guinea should be driven flush with the ground at the point where the toe of the fill intersects with the natural ground (catch point). The slope stake shall be placed back of the guinea and out of the traveled way at right angles to the centerline. The marking shall show the stationing of the section on the back of the stake; the front face shall show the letter "F," to indicate fill, with the amount of the fill from the guinea to the grade, the horizontal distance from centerline to the guinea and the ratio of the fill slope to be constructed.

A slope stake marked 0.0 should be driven at the shoulder grade point on entering a cut from a fill or vice versa.

The standard size slope stake is 1 in. X 2 in. X 14 in. (2.5 cm X 5 cm X 35 cm).

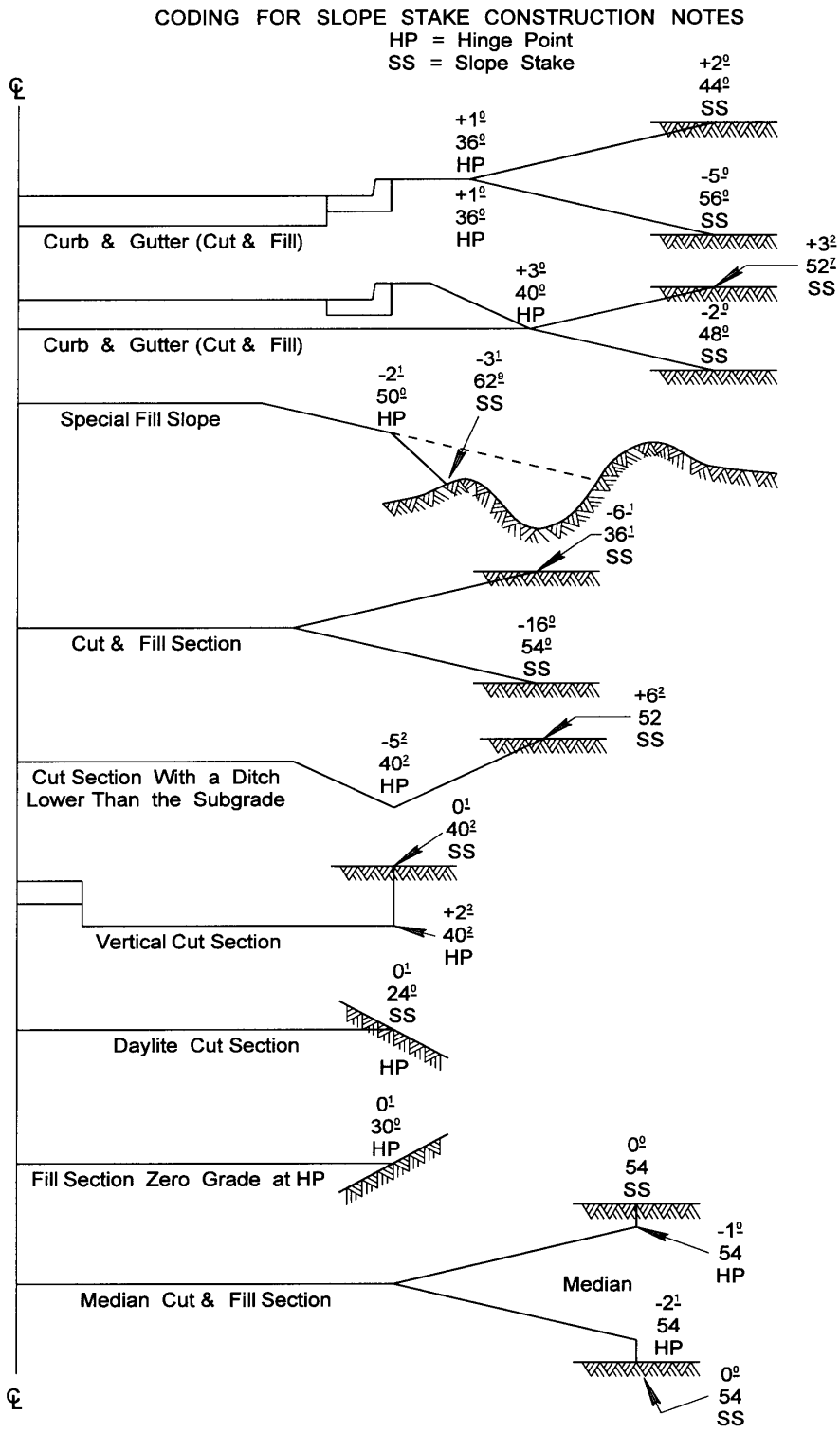

Exhibit 1109-1-1. Slope Staking Coding & Placement

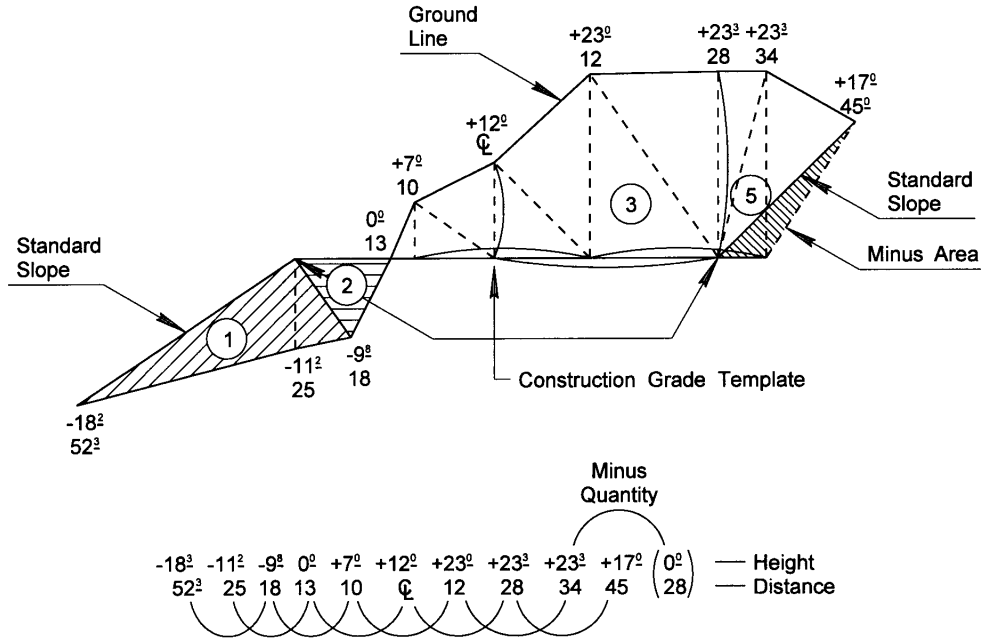

EMBANKMENT

$\underbrace{34.3 \times 11.7}_{1} + \underbrace{12.0 \times 9.8}_{2} = 518.91$ (Double Area)

EXCAVATON

$\underbrace{13.0 \times 7.0} + \underbrace{22.0 \times 12.0}_{4} + \underbrace{28.0 \times 23.0}_{3} + 22.0 \times 23.3 + \underbrace{17.0 \times 23.3}_{5} - 6.0 \times 17.0 = 1805.70$ (Double Area)

Exhibit 1109-2-1. Cross Section Computations

												GR	EL
88+50	+88.0 106.0 RS	+70.4 83.8 SS 3/4:1	+32.8 31.0 HP	+31.3 23.5	+19.6	+5.1 29.5	+2.6 37.0 HP	+2.0 38.5 SS 3/4:1	+5.4 53.0 RS	4199 04	4002 15	3967.48	87.08
89+00	+79.4 101.8 RS	+68.2 82.2 SS 3/4:1	+41.1 31.0 HP	+23.9 23.5	+19.7	+6.3 29.5	+1.8 37.0 HP	+1.0 37.8 SS 3/4:1	+6.0 49.0 RS	4445 61	4295 92	3969.34	89.04

Exhibit 1109-2-2. Roadway Cross Section Book

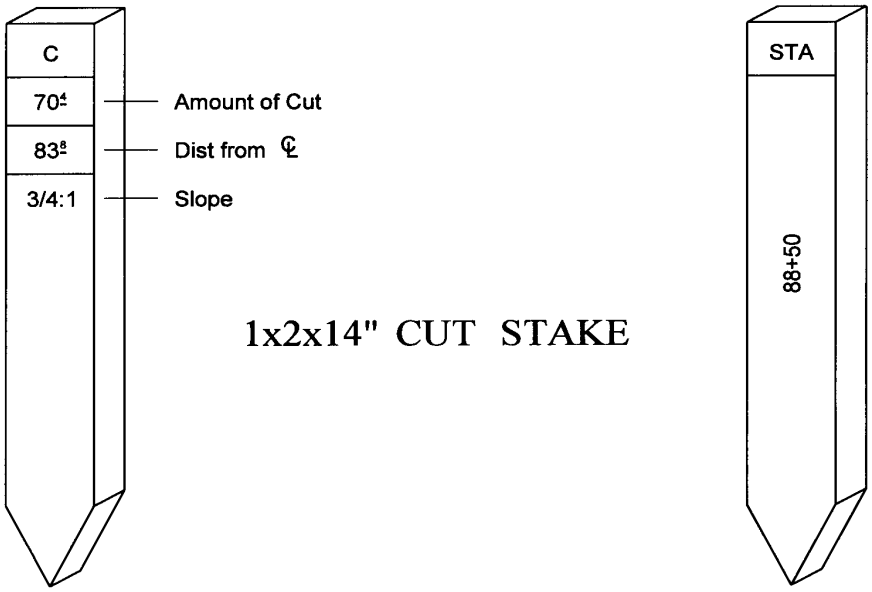

1x2x14" CUT STAKE

Front Back

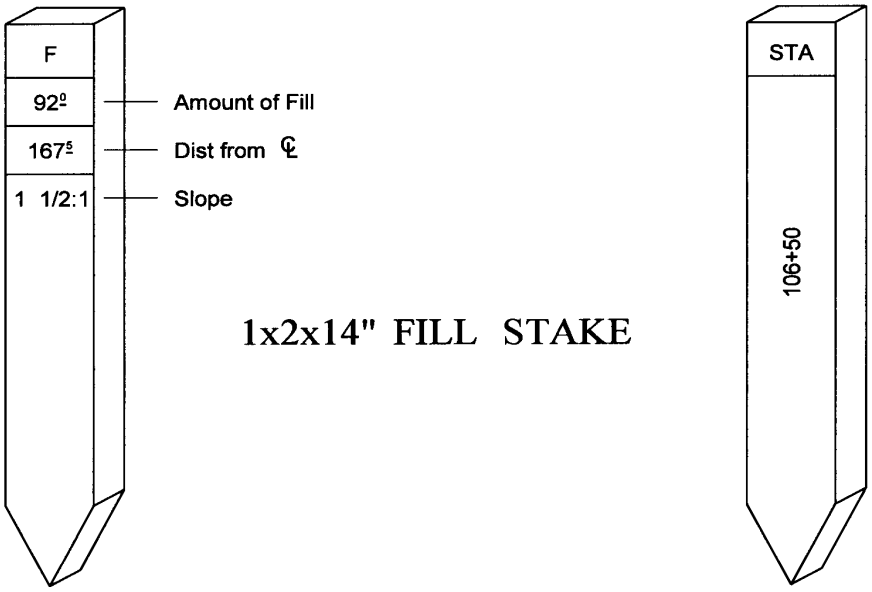

1x2x14" FILL STAKE

Front Back

Exhibit 1109-3-1. Marking of Slope Stakes

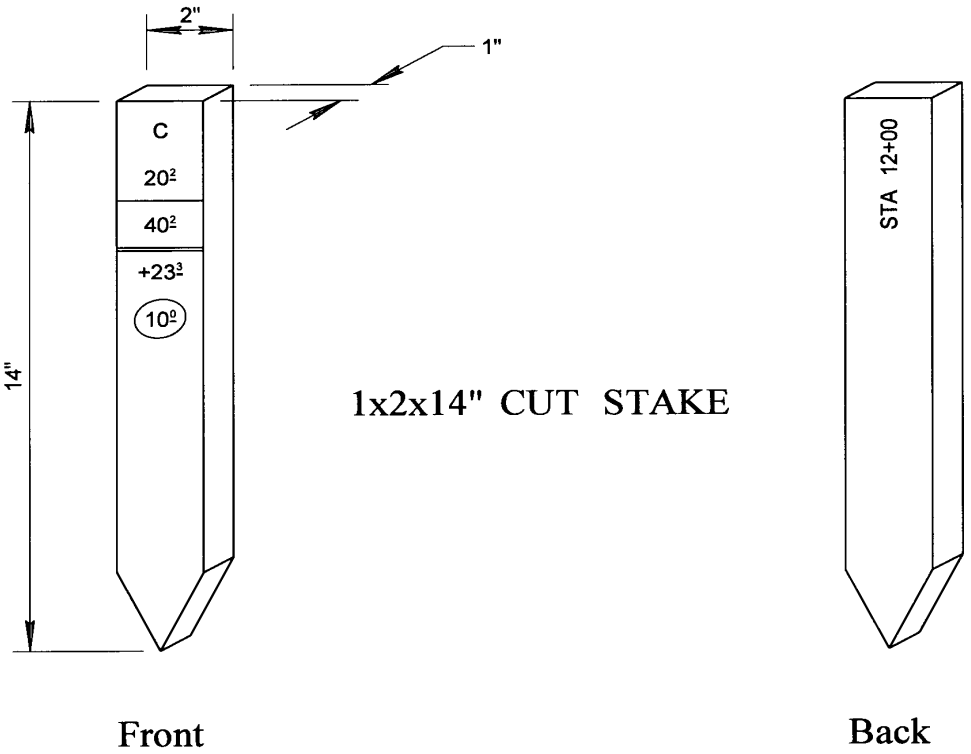

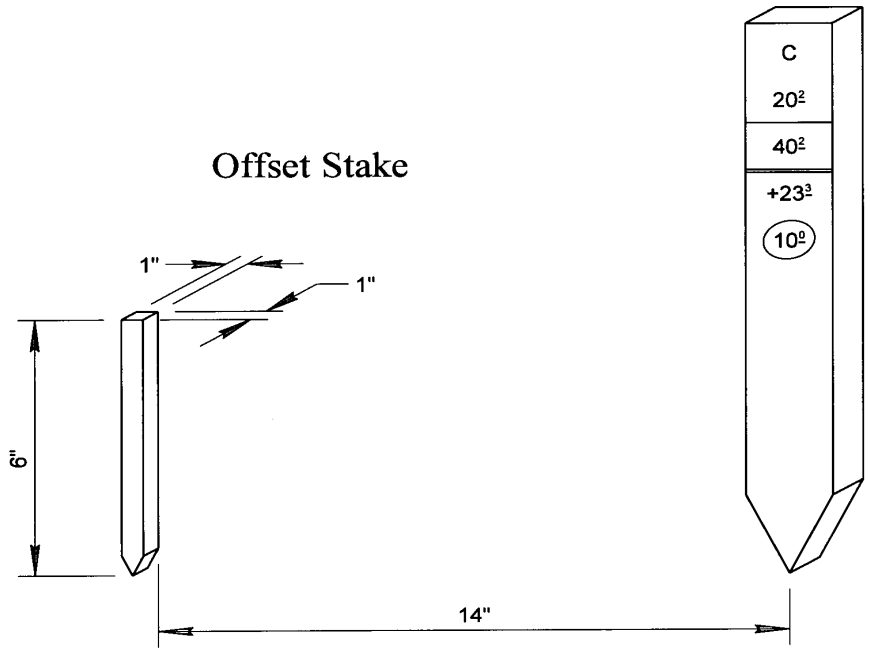

Exhibit 1109-3-2. Slope Stake Offset Alternate

1110 DRAINAGE STAKES

Ditches, dikes, crown ditches, crown dikes, and drainage channels shall be staked to a gradient and alignment which will cause the minimum of erosion and which will conform to the Roadway Construction Standards for the item.

Drainage channels shall be slope staked to conform to dimensions and slopes as shown on the plans. The method of staking shall be the same as that used in staking the roadway section.

A drainage excavation book shall be prepared in the same manner as the cross section book for the purpose of computing drainage excavation quantities. The top of each page shall indicate the location, size and length of each ditch or channel. Use a page to sketch the channel in order to indicate a tie to centerline of roadway and position of ditch in relation to the roadway.

Care must be taken when staking drainage excavation at the inlet and outlet ends of structures to make certain that the normal flow of water is not restricted and that a minimum amount of erosion will occur at the location of the structure.

Crown dikes, crown ditches, and grader ditches must be staked as soon as slope rounding of cuts has been performed so that the Contractor can promptly construct such facilities, thus protecting the slope rounding and cut slopes from erosion. All ditches specified to be measured by the linear foot will be recorded in a prepared miscellaneous book showing type, location and length.

1111 MATERIAL PITS

When the contract specifies that the Contractor will supply his own material source, ADOT personnel will not survey or stake the pit.

ADOT personnel will not furnish the Contractor any survey services, except those services called for in the specifications or in this manual.

Some basic rules should be followed in the staking of ADOT furnished material pits regardless of the basis of payment. First, the right-of-way limits of the pit should be determined and marked. A sketch of the pit area should be made in the pit book and definite survey ties made between test hole locations and roadway stationing or between test hole locations and a section line in case the road is at a remote distance. If the pit is divided into more than one area, or ownership, each area or ownership shall be marked off, measurements should be taken for each area, and each area plotted in the pit book. (See Exhibit 1111-1)

A base line, well outside the working limits of the pit, should be established on 50 foot (15 meter) stationing. Parallel base lines on opposite sides of the pit are recommended in order to keep sections across pit area at right angles to base line. Base lines should be well referenced since equipment working the pit may be expected to operate both inside and outside the pit limits, often disturbing reference stakes located close to the pit area. Distances of 150 feet (45 meters) or more for references should be used.

In most cases the item of stripping pits is paid on a cubic yard basis. In this event, it is necessary to cross section the pit area before and after the stripping operation. The final cross section notes of the stripping item would serve as the original sections for pit measurements.

In staking pits, where the material is to be paid for on a cubic yard (cubic meter) basis, the following procedure should be followed. After the base line has been established and referenced, and assumed elevations or actual elevations have been taken on all hubs along the baseline, the entire pit area is cross sectioned at right angles to the base line and the notes should be recorded in a field book. Level notes should show level turns and closures. Make certain that cross sections are taken so as to cover the entire area where material is to be removed and such area marked on the ground so the Contractor and the Inspector will know which area has been cross sectioned. No material should ever be removed from a pit area on a cubic yard payment basis until cross sections have been taken. Level circuit notes shall be retained with the cross section noted as part of the records of measurement and as a means of perfecting the record in case of a discrepancy or a controversy. After completion of the removal of material from the pit area and smoothing up of the area, final cross sections are taken from the base line, using the same assumed or actual elevations. Volumes are then computed for the original and final sections, using the average end area method, with the difference between the two representing the volume of material actually removed from the pit area.

Where the pit area is subject to flood conditions during the rainy season, the area shall be remeasured at intervals or immediately after depleting each area. Do not wait until the project is completed before remeasuring.

While the staking method recommended herein is acceptable, the method to be used shall be determined by the Engineer. One important fact to remember, however, is to use the same method of measurement on both the original and final sections.

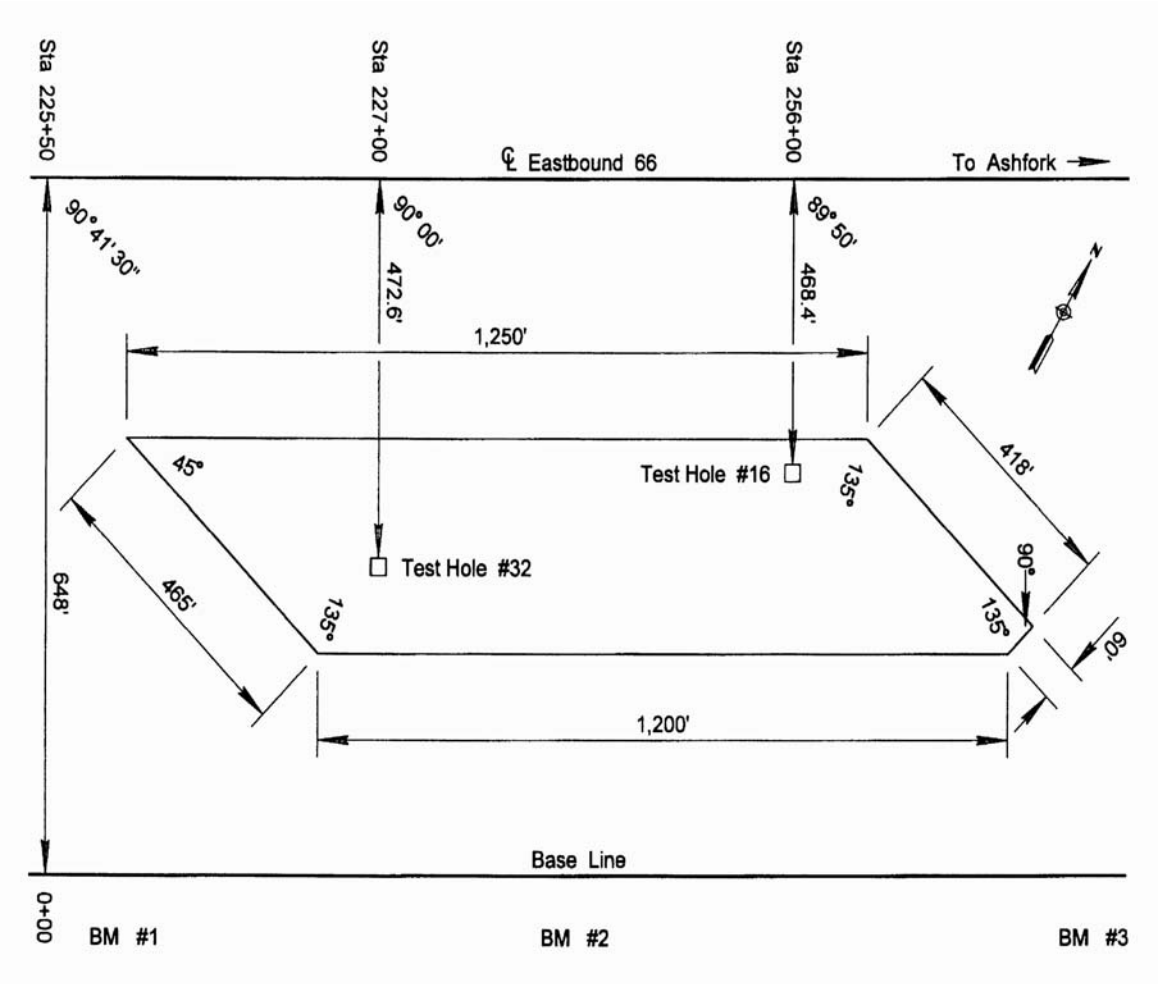

Pit No. 7020

648' Right E.B. Station 225+50
∠ = 93° 37'00"

Pit BM's on Baseline

Elevation

BM	No. 1	3432.09
BM	No. 2	3425.50
BM	No. 3	3419.43

Exhibit 1111-1. Material Pit Diagram

1112 MISCELLANEOUS CONSTRUCTION STAKES

1112-1 Right-of-Way Fence

Line fence shall be staked as indicated on the plans and the Roadway Construction Standards. The staking shall indicate the line of the fence and the location of strain posts, end posts, corner braces, and gate panels.

Right-of-way lines and property boundaries should always be set by a Registered Land Surveyor.

Since right-of-way stakes are usually set as references to the centerline, they are usually sufficient for the line of the fence. The fence line should be staked at intervals not to exceed 200 feet (60 meters) depending upon the terrain, except on curves where the stakes should be set on 25 foot (7.5 meter) or 50 foot (15 meter) stations. To run offset lines to a centerline curve, use the table entitled "length of circular arcs for radius of one degree," as found in most route survey books. In lieu of this table, the following formula may be used:

$$L = \frac{(R +/- O)\,C}{R}$$

Where: R = radius of centerline curve.
O = offset distance from centerline to right-of-way line.
C = chord length on centerline.
L = chord length arrived at for offset line.

Proceed to run the offset line by using the stationing of the centerline and the deflections as computed for the centerline.

In order to prevent the probability of constructing the fence outside of the right-of-way at any point, the standards require the fence to be located 6 inches (15 centimeters) inside of the right-of-way. Measurement and payment shall be made in accordance with the standard specifications and special provisions.

1112-2 Cattle Guards

Cattle guards shall be staked and constructed to conform to the finished grade of the roadway and as indicated by the plans and standards drawings. When necessary, provide outlets at the ends for drainage.

1112-3 Guardrail

The staking of guardrail must follow closely the appropriate roadway construction standard. Special attention should be given to the flares and end treatments.

Offset nails for guard rail control are generally adequate if set at 50 foot (15 meter) centers on tangent sections or 25 foot (7.5 meter) centers on sharp radius curves. Each post of a flared end section should have an offset reference.

1112-4 Bank Protection

All bank protection shall be staked soon after the channel changes and structures are built so that proper ties between the structures and the bank protection may be made early for protection of the roadway and structures.

1113 GRADE STAKES (BLUE TOPS)

The first use of grade stakes will normally be to determine that required excavation for drainage structures has been achieved. Following this, as each section of roadway subgrade is brought to approximate grade, it shall be "blue topped" and the surface finished to conform to the grade established. "Blue tops" are normally placed at all stations and plus 50 foot (15 meter) stations. They are always placed on centerline and at right angles to the centerline on each shoulder. Very often it is necessary to set additional stakes between the centerline and the shoulder grade stakes due to the greater width of the roadway as for interstate construction.

All grades for "blue tops" shall be computed to the nearest 0.01 feet (3 millimeters); the Height of Instrument (H.I.) levels and Bench Marks (B.M.) shall be carried to the nearest 0.01 feet (3 millimeters), and the "blue tops" shall be driven until they are within nearest 0.01 feet (3 millimeters) of the required grade. In moving ahead during the "blue topping" operation, it is always good practice to check back on the last row of stakes driven as a double check on the new H.I. and grade calculations. No writing is placed on the "blue top" stakes. "Blueing" the top of the stake indicates the desired grade at that point. It is standard practice to place a quarter lath at each "blue top" driven to serve as a guard stake to the "blue top". The guard lath placed at the centerline "blue top" should show the station designation. It is very important that these stations be shown for several reasons; among them the continuity of the surveying operation through cross checks, the ability of the level person to always know where he is, and the ability for those working on the project to keep track of locations for work and quantities. Often the first "blue top" stakes set for the rough subgrade will be partially or totally destroyed by grading equipment, and will have to be reset. When resetting these grade stakes, it is possible that those which are still in place are not correct due to having been disturbed, therefore, they should be checked for grade as they are encountered. Stakes less than 8 inches (20 centimeters) in length should not be used as blue tops since lesser length is subject to disturbance by equipment and can result in erroneous elevations after the grade has been worked.

"Blue tops" shall be set for each course of surfacing material; for example, the top of select material, top of aggregate base, etc.

On completion of the grading and draining, the survey crew shall check all references to the centerline and see that the locations, distances and angles are properly shown in the field notebook and on the "as-built" plans. All permanent bench marks shall be checked for elevation and all brass or aluminum caps marked with the proper elevation and recorded in the proper field book and on the as-built plans.

1114 REMEASUREMENT

1114-1 General

Ditches and dikes that are measured by the linear foot shall be remeasured by the survey crew after they are completed and these measurements and locations recorded on the as-built plans.

Numerous other items require remeasurement and documentation such as: line fence and gates, cattle guards, curb and gutter, embankment curb, guide posts, bank protection, right-of-way markers, catch basins, and guardrail.

1114-2 Slides

If slides have occurred in cut sections, the Resident Engineer shall make a determination as to whether such slides are payable under Specification 203. If found to be payable, the volume of the original space which the slide occupied shall be measured and computed in cubic yards (cubic meters) by the average end area method and included in the quantity of roadway excavation for payment at the price bid for roadway excavation.

Likewise, any excavation made below grade, if made by the direction of the Engineer, shall be similarly measured and included in the quantities of roadway excavation.

1114-3 Overbreakage

Overbreakage is not measured or paid for. The Surveyor must become familiar with that portion of Section 203, which deals with the measurement and payment for the item of "roadway excavation originating outside of the neat lines of cut slopes as a result of necessary blasting operations." This section and detail shall be followed in the measurement and payment of this item. (The term "overbreakage" is not used in the Standard Specifications.)

1115 COMPUTATIONS

1115-1 General

The project field office is given the responsibility of computing the construction survey notes. Since the pay quantities of the contract are determined from the calculations based on the construction survey notes, the project office should be furnished with the necessary equipment and staffed with qualified personnel to facilitate an early determination of pay quantities.

All construction notes and electronic data should be left in the field office on completion of a notebook or when a notebook is not in use in the field. Notes requiring explanation should not exist; however, should an occasion arise where an explanation of notes or diagrams becomes necessary, the Party Chief and the Office Supervisor will collaborate in making necessary explanations in the book. This work should be performed in the field at the site of the work in order to preclude uncertainty of the facts involved.

Cross-section books consisting of notes on roadway excavation, slides, drainage excavation or channel excavation, borrow pits, and any other items that require measurement by the average end area method shall be computed and checked by the field office, and then submitted to Construction Operations for verification of quantities.

Computations may also be done by a CADD/Mapping technician if an electronic data collector is used.

1115-2 Average End Area

The volume of material removed between two stations along the roadway is determined by the average end area method. The crisscross or loop method of computing cross sections is relatively simple, providing care is exercised in observing a few simple rules, as follows:

1. Check the section for grade points (0.0 sections) between cut and fill.

2. Note all ground line breaks between the shoulder point and catch point.

3. Be careful to place the end area quantities in the proper column provided for cut or fill.

4. Show whether the end areas are double-end areas or single-end areas. The area is always a double end area unless the quantity is divided by two before recording the result shown on the calculator.

5. Make certain that all points necessary for proper computation are indicated in the cross section notes, i.e., hinge points, slope stake, etc.

In computing quantities from areas obtained by the double-end area method the following formula applies:

Volume (cubic yards) = $$\frac{1}{2}\left(\frac{A'+A''}{2}\right) X \frac{L}{27} = L\left(\frac{A'+A''}{108}\right)$$

in which A' and A" equal double areas of end sections.

1115-3 Overhaul

The specifications require that the Contractor shall place roadway excavation, structural excavation, drainage excavation, or other material as required. The cost of hauling and placing this material is included in the contract price for the item involved. Although there normally is no pay item for overhaul, it is sometimes necessary to calculate the haul for special studies or as a part of a claim analysis.

Overhaul is generally computed using the cubic-yard-mile.

When the Engineer desires to arrive at the number of cubic-yard-miles of overhaul actually performed by the Contractor, it is necessary to construct a mass diagram of the area in question.

1115-4 Mass Diagram

Volumes may be calculated as shown below or done by CADD/Mapping if an electronic data collector is used on a project.

The plans provide the Contractor with the theoretical overhaul and balance points. The actual balance points and cross-hauled quantities will vary to fit the Contractor's method of operation. This requires the Engineer to keep accurate records of all field balance points and of the materials placed between the balance points.

The mass diagram is constructed in units that extend between the actual field balance points, as reported by the Inspector, with the shrinkage or swell of the excavated material considered uniform. The horizontal scale or abscissa represents stations along the centerline, and is usually plotted to a scale of 1 inch = 100 feet (1 centimeter = 10 meters). The vertical scale or ordinate represents the algebraic sum of the excavation and embankment from some selected station to any station in question and is called the solidity line. The scale shall be determined from the maximum ordinates on the particular projects. It may be 500, 1000, or 2000 cubic yards (250, 500, or 1500 cubic meters) or more to 1 inch (25.4 millimeters).

A curve is drawn connecting the points plotted and is called the mass diagram. Reading from left to right, all ascending lines indicate amount and location of excavation; all descending lines indicate amount and location of embankment.

Instead of starting with the origin as zero, it is better to start with an ordinate figure of say 300,000 so as to keep from having to change from plus to minus, or vice versa, when crossing the "datum line." The initial abscissa shall be the beginning station of the project or station of the nearest balance point back of the point where overhaul is questionable.

As the quantities involved in the mass diagram are computed, they shall be tabulated opposite their corresponding stations. The columns will show roadway excavation, drainage excavation, or overbreakage (if used in the roadway), ground compaction, embankment, embankment equivalent to excavation, and finally "solidity," the ordinate which contains the algebraic accumulated sums of all quantities used in constructing the mass diagram. The initial solidity of 300,000 is the horizontal datum line and should always be of such value that the accumulated solidity value is above zero.

Since excavation usually swells or shrinks, making more or less embankment, it is necessary to adjust the measured embankment quantities to make them correspond to the excavation quantities. To make this correction, first obtain the total net quantity of excavation (considered positive or plus) that went into the roadway, including borrow, overbreakage, drainage, etc., and then obtain the total ground compaction and embankment (negative or minus) quantity. Next, divide the total plus quantities by the total minus quantities to

obtain a factor that when multiplied by the measured embankment quantities, gives the corresponding "Embankment Equivalent to Excavation." Each measured embankment quantity per station or plus 50 foot (15 meter) station shall be multiplied by the factor in order to compute the solidity at all stations.

As a check, the total "Embankment Equivalent to Excavation" should equal the total measured excavation quantity contained in the tabulated list. Since the total embankment times the factor equals the total excavation, the desired quantity (solidity) may then be obtained by progressive addition: excavation (positive) and embankment equivalent to excavation (negative).

It is obvious from the method of computation of the solidity that a cut will be represented by a rising line or increasing quantity, and a fill by a falling line or a decreasing quantity. When the curve is above the datum line, it indicates that material must be hauled ahead or to the right; when below the line, material must be hauled back or to the left. The loops which convex upward indicate that the haul from cut to fill is to be in one direction, to the right in this case, while loops concave upward indicate a reverse direction for haul. The maxima and minima of these curves are opposite the 0.0 or grade points on the profile, the changes from cut to fill, or vice versa. (See Exhibit 1115-4-1.)

In general, the mass diagram is composed of balanced loops obtained by drawing horizontal lines across the diagram as shown in Exhibit 1115-4-1. Every loop of the diagram is composed of two equal parts, one of cut and the other of fill. The excavation and the embankment are in balance where the diagram crossed any horizontal line, as at Station 1474+50 to the point where it returns to that line as at Station 1494+33, in the example. The loops above and below this line are balanced sections that may be considered apart from the rest of the diagram.

It is usually impossible to balance successive loops within the same datum line for an entire project, especially where imported borrow quantities are required. (See Exhibit 1115-4-1.)

At times, it will be necessary to show several balanced sections within the field balance points, Stations 1474+50, 1494+33, and 1501+00, as shown in the loops above the datum plane between Stations 1474+50, and 1494+33. These field balance points will be used for computing the swell and shrinkage factors that will be applied to the embankment.

The horizontal lines are drawn through the loops so as to attain as near as possible a straight line on the mass curve between the horizontal lines. The difference in solidity of any two adjacent horizontal lines is the actual quantity of excavated and embankment material between the stationing of the two lines.

In determining where to place these horizontal lines, keep in mind that the excavation shall be placed into the nearest fill. This requires drawing the horizontal line through the loops so that the roadway cut will be placed into an adjacent fill section, keeping in mind that cross haul shall be avoided except where a poor quality of material must be hauled and placed in the bottom of a large fill not adjacent to the poor material.

The most economical distribution of material demands that in making a fill, the material should be obtained from the following sources:

1. from the nearest cut,

2. from a cut such that the cost of haul shall not exceed the cost of excavating the material, and

3. from a nearby borrow pit.

The cubic-yard-mile overhaul is only that quantity hauled beyond the 1500 feet free haul limit.

The only quantities to be considered when computing the cubic yard mile haul are those quantities between the datum line and the line representing the free haul limits. The line representing the 1500' free haul may be determined graphically by first obtaining the approximate stationing of the extreme ends; compute the exact location by applying ratio and proportion to the rate of change per foot and the solidity of the near stations which are 1500 feet apart as determined graphically.

In Exhibit 1115-4-1, the first horizontal line drawn across the large loop is the 1500 foot line crossing the loop at Station 1475+76.7 and at Station 1490+76.7. These stations were determined as directed in the above paragraph. The next horizontal line to be drawn crosses the loop at Station 1475+40.3 and at Station 1492+00. This line is drawn in order to "attain as near as possible, a straight line on the mass curve between the horizontal lines." The difference between the ordinate represented by the datum line and the ordinate between Stations 1475+40 and 1492+00 is the quantity of material to be hauled as indicated in the example of computations below.

The horizontal line between Stations 1476+50 and 1488+47.5 is drawn to show three balanced sections within the large balanced loop. These small loops were drawn to indicate the most economical distribution of the material within the free haul limits. At times it will be necessary to show several balanced sections within a large loop and the sections may consist of one or more loops in excess of the 1500 foot free haul limits.

The vertical distance between the horizontal lines represents embankment if on a falling line, or excavation if on a rising line. Since imported borrow appears only in calculating the swell or shrinkage factor, the quantity represented by the borrow will always be represented by an excess embankment quantity, depressing the diagram, as indicated on Exhibit 1115-4-1, between Stations 1494+44 and 1497+12.1. Waste material appears only as excavation in the computations and has the opposite effect.

At Station 1497+12.1, a new datum line is used, as all the embankment above this line has been taken care of by imported borrow. The same condition will exist where waste material is used in the mass except that the datum line will be above the original datum line. There may be several datum lines to consider, depending on the type and quantities of materials in a project. It is usually impossible to balance successive loops with the same datum line as shown in Exhibit 1115-4-1.

The method of computing hauls varies but the method most commonly used is as follows:

The cubic-yard-mile overhaul is the product of the vertical dimension (the number of cubic yards between the horizontal lines) starting at the 1500 foot line, and the average length of haul – 1500 foot free haul, divided by 5280 feet.

The number of cubic yards between the horizontal lines equals
300,964.2 - 300,789.3 = 174.9 Cubic Yards.

The average length of haul =

$$\frac{(1490+76.7-1475+76.7)}{2}+\frac{(1492+00-1475+40.3)}{2}=\frac{1500+1659.7}{2}=1579.85$$

$$\left(\frac{(1579.85-1500)}{5280}\right)\text{X}174.9=2.6\,\text{C.Y.Mile Overhaul}$$

This brief outline is for a mass diagram of a completed project. Preliminary diagrams are used in computing quantities for estimates prior to construction by using assumed swell and shrinkage in constructing the mass diagram and computing the haul.

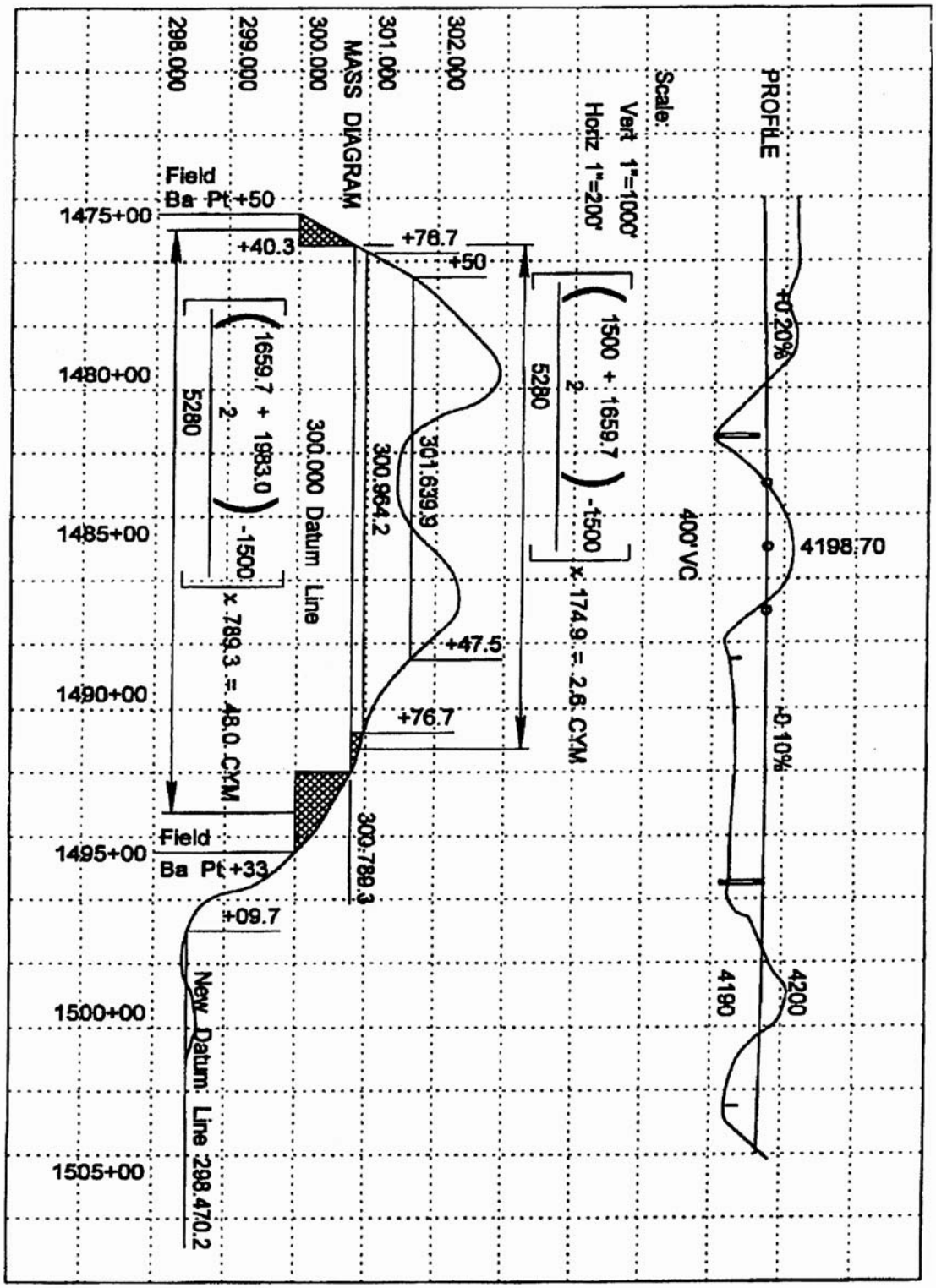

Exhibit 1115-4-1. Mass Diagram

1116 SURVEY TASK LIST

ADOT SPEC SECTION	ADOT SPEC WORK ITEM	ACTIVITY DESCRIPTION	INSPECTOR	SURVEY CREW	FREQUENCY
201	Clearing & Grubbing	Check staking limits w/ right-angle prism and 100 foot chain.	X		Beginning of job.
202	Remove Structures & Obstructions	Measurements & records.	X		Prior to removals.
203 / 204	Earthwork	Review plans; check Contractor's survey staking:			
		check catch points		X	500 foot maximums.
		check 90 degree angles		X	500 foot maximums.
		check slope stakes		X	500 foot maximums.
		check alignment		X	500 foot maximums.
		Spot -check slopes w/hand level.	X		As needed, 500 ft. max.
		Check each progressive lift depth.	X		As needed, 500 ft. max.
205	Grading Roadway for Pavement	Check Contractor bluetop survey staking.		X	200 foot average.
		Stringline all bluetops.	X		All.
301 to 304	Subgrades, Subbases, and Bases	Subgrade only: check Contractor survey control bluetops.	X		All.
		Subbases & bases: check bluetops.		X	200 foot average.
		Stringline each lift of subgrades, subbases, and bases.		X	By request only.
305	Lean Concrete Base	Check horizontal & vertical alignment of wire staking.		X	200 foot maximum.
		Check hub & tack control with plumbline and stringline.	X		100 foot intervals.
401	Portland Cement Concrete Pavement	Check horizontal & vertical alignment of wire staking.		X	200 foot maximum.
		Check hub & tack control with plumbline and stringline.	X		100 foot intervals.
402	PCCP Repairs	Measure, locate, record work.	X		As required.
406 to 408	Asphaltic Concrete Classes	Check depths & offsets, stationing, and straightedging.	X		100 foot intervals.

ADOT SPEC SECTION	ADOT SPEC WORK ITEM	ACTIVITY DESCRIPTION	INSPECTOR	SURVEY CREW	FREQUENCY
501 / 502	Pipes, Culverts, and Drains	Check Contractor's survey cut stakes: vertical and horizontal control.	X		Short runs - both ends.
		Use appropriate survey instruments.		X	All large sizes, long runs; others by request only.
		Check pipe excavation and backfill using hand level, watch grade checker.	X		Check each advance.
503 to 505	Catch Basins, Standpipes, Manholes	Check position: alignment & elevations.		X	Check only upon request.
		Verify conformance with design.	X		Field verify each location.
601	Concrete Structures: Bridges	Forms/soffit/falsework: verify edge of deck horizontal and vertical control.			
		Check offsets, grades, screeds from control.	X	X	Check every structure.
		Abutments & piers: check location & elevation of foundations prior to major pours.		X	Check every structure.
		Bearing pads: check initial placement and control points, prepare as-builts.		X	Verify layout at beginning of job only, and by request thereafter.
		Check bearing pads prior to concreting.	X		Subsequent construction.
		Check approach and anchor slabs.		X	By request only.
		Bid-Well: provide fill marks for Inspector to check bid-well initial setup.		X	Verify layout at beginning of job only, and by request thereafter.
		Continue progress checks: depths, joint locations, etc.	X		Subsequent construction.
601 (Cont'd)	Concrete Structures: Walls and Misc.	Check Contractor's initial staking, check footings placement & elevations, etc.		X	Verify layout at beginning of job only, and by request thereafter.
		Check locations & grades; check all wall forms and miscellaneous structures for plumbness and alignment.	X		Check all items.
603 & 609	Pilings & Drilled Shaft Foundations	Check Contractor's survey control hubs, check elevations and horizontal placement.		X	Initially all, then random.
		Check lines and grades.	X		Check all structures.

ADOT SPEC SECTION	ADOT SPEC WORK ITEM	ACTIVITY DESCRIPTION	INSPECTOR	SURVEY CREW	FREQUENCY
604	Steel Structures	Forms/soffit/falsework: verify edge of deck horizontal and vertical control.		X	Check every structure.
		Check offsets, grades, screeds from control.	X		Check all items.
		Abutments: initial location & elevation.		X	Check every structure.
		Bearing pads: check initial placement and control points, prepare as-builts.		X	Verify layout at beginning of job only, and by request thereafter.
		Check bearing pads prior to concreting.	X		Subsequent construction.
		Bid-Well: provide fill marks for Inspector to check Bid-Well initial setup.		X	Verify layout at beginning of job only, and by request thereafter.
		Continue progress checks: depths, joint locations, etc.	X		Subsequent construction.
606 to 608	Sign Structures & Support	Check installation layouts, foundation elevations, and slopes.		X	Verify layout at beginning of job only, and by request thereafter.
		Check lines and grades.	X		All major units.
801 to 804	Landscape Earthwork	Check Contractor survey control bluetops.		X	By request only.
		Inspect final grading & depth of soil.	X		All.
808 / 809	Water Distribution & Sewer System	Check Contractor's survey cut stakes: vertical and horizontal control.	X		Short runs - both ends.
		Use appropriate survey instruments.		X	All large sizes, long runs; others by request only.
		Check pipe excavation and backfill using hand level, watch grade checker.	X		Check each advance.
902 / 903	Fences	Check layout work & measure for payment.	X		Prior to and when complete.
905	Guardrail	Check Contractor's layouts.		X	By request only.
		Check layout and placement.	X		Subsequent construction.
908	Curb & Gutter	Check alignment & grade control points.	X	X	Only if C & G is placed prior to paving; otherwise checked by Inspectors.
909	Survey Monuments	Check Contractor's survey on permanent section corner replacements & similar.		X	Verify all key monuments.
910	Concrete Barriers	Check placement and dimensions.	X		All critical points.
911	Right-of-Way Markers	Check placement.		X	Verify all markers.

ADOT SPEC SECTION	ADOT SPEC WORK ITEM	ACTIVITY DESCRIPTION	INSPECTOR	SURVEY CREW	FREQUENCY
914	Sound Barrier Walls	Check Contractor's initial staking, check footings placement & elevations, etc.		X	Verify layout at beginning of job only, and by request thereafter.
		Check locations, grades, and plumbness.	X		Check all structures.
925	Construction Surveying and Layout	Inspections and random checks as detailed above per instructions of the Engineer (per the Specification).		X	As directed.

GENERAL CONSTRUCTION-RELATED SURVEY ACTIVITIES

1. Preliminary Design Reviews: geometrics, alignment, terrain, obstructions, constructability.
2. Coordinate w/ADOT Photogrammetry on flights and mapping requests.
3. Maintain right-of-way records.
4. Review and check temporary construction easements.
5. Support review and approval of permit requests.

1150 CONTRACTOR CONSTRUCTION SURVEYING

1150-1 General Instructions

The preceding chapters apply to survey by either Contractor or ADOT personnel. It is the intent of this section to present a series of additional guidelines and staking methods for Contractor construction surveying (Specification 925).

Additional information should be sought in the ADOT *Engineering Survey Services Manual for Field Surveys*. The manual will explain how and when different survey methods and instruments should be used. All transits, theodolites, etc., will be referred to as instruments in this manual since they are thoroughly discussed in the *Engineering Survey Services Manual for Field Surveys*. The manual also illustrates field book notation and how electronic data files should be handled.

The methods for note preparation and staking procedures outlined in this manual are presented as acceptable methods of doing the work. The method selected for each phase of the construction survey shall be determined by the surveyor as each project may vary considerably in requirements.

The Department will provide control points for establishing an accurate construction centerline and will establish bench marks adjacent to this line for the proper layout of the work as described herein. Control points will be located in accordance with Standard Specification 925, Construction Surveying and Layout. Some complex projects may require more bench marks control points set by the Department will be identified in the field to the Surveyor and any diagrams available will be provided. The Department will provide the Contractor with field books or data files containing the control point data at the preconstruction conference. If a control point cannot be established at the outset due to right-of-way restrictions, the Department will establish that point at the earliest possible time when right of entry to the area is obtained. At the earliest possible time, the Contractor shall furnish as many large and small sets of construction plans to the Surveyor as needed. The Contractor shall also provide his proposed schedule of work sequence to the Surveyor.

Prior to beginning any survey operations, the Surveyor shall furnish to the Engineer, for his approval, a written outline detailing the method of staking, marking of stakes, grade control for various courses of materials, referencing, structure control, and any other procedures and controls necessary for survey completion. A part of this outline shall also include a schedule which will show the sequencing of the survey and layout work, throughout the course of the contract, listing a percentage of completion for each month. The method of staking and marking of stakes should be reviewed in the field with the Contractor and the Inspector, making certain that all parties understand the staking methods and marking.

It may be advantageous to supply the Contractor with diagrams indicating staking procedures. This could also be helpful in case the individual that originally was in charge of staking, for one reason or another, is not available. Copies of staking layouts should be kept in the project files. This would be especially helpful in difficult or unusual staking situations.

1150-2 Study and Checking of Plans

Before any staking is started, the plans shall be thoroughly reviewed and cross-checked relevant to the juxtaposition of current project items, past projects, and adjacent projects. Also the field control points shall be carefully checked by the Surveyor. All parts of the plans pertaining to control such as curve data, both horizontal and vertical, shall be checked. All major structures shall be checked as to plans elevations from finish grade to bottom of footings. The Surveyor will verify the accuracy of the control points established by the Department and will also check for correlation between these points and the plans.

If errors are discovered during the plans checking or the verification process, or if control points do not agree with the geometrics shown in the plans, the Contractor shall promptly notify the Engineer in writing, and explain the problem in detail. The Engineer will advise the Contractor within 5 working days of any corrective actions which may be deemed necessary.

Directed changes to the work shall be reimbursed under subsection 925-5 of the Standard Specifications and additional contract time may be considered for any delays.

A careful check of plans and control points may prevent costly errors and delay in progress.

The preparation of field books and recording of field measurements are an important part of the survey operation. Keep in mind that these notes will serve as an official document.

All field notes shall be recorded in standard field notebooks which will be furnished by the Department unless an electronic data collector is used. Never use loose-leaf books or pads for permanent records. All field notebooks submitted to ADOT become a permanent record. Electronic files shall be compatible with Department software.

Neatness and clarity are of uppermost importance in the preparation of field notes. When preparing notes, provide sufficient detail that they may be readily interpreted by those who are not familiar with the project. Too much detail is far better than too little. Never crowd survey notes; paper is relatively cheap.

Errors made in the recording of the field notes will not be erased. Draw a line through the erroneous figures and place the corrected figures directly above. When necessary to make revisions in notes, the abandoned notes shall not be destroyed but shall be crossed out and reference made as to the book number and pages where revisions appear. When corrections are made the individual making these should date and initial each change.

Each book should have pages numbered only at the top of the right hand sheet and the contents indexed on the first pages. The date, weather conditions, and party personnel shall be shown at the beginning of each days notes. The person in charge of making the survey or recording the measurements shall affix his or her signature at the end of each days notes and on each page containing the results of a measured item.

All construction records shall be plainly marked for identification with the contents, route, project number, stations, name of Surveyor, and year.

All project records shall be delivered to ADOT upon completion of the work where they will become permanent project records.

Survey data may also be collected using an electronic data collector. When survey data is collected electronically it should be turned into the Resident Engineer on the original diskette along with a copy that is sent to CADD/Mapping illustrating the day of completion. Ensure that electronic files are compatible with Department software. Refer to ADOT *Engineering Survey Services Manual for Field Surveys* for additional information.

1150-3 Staking Structures

Refer to subsection 1108 of this Manual for culvert and bridge structure staking requirements.

1150-4 Slope Stakes

Slope stakes may be placed prior to the Contractor clearing the ground in cases of open, grassy prairie, or cultivated land, where a minimum of clearing is required; otherwise, a clearing line should be established and the roadway prism should be cleared prior to setting of slope stakes, or as specified in the special provisions. (See Exhibits 1109-4-1, 1109-4-4, and 1109-4-5.)

The slope stakes outline the cut or fill limits and the slopes to be built for the Contractor. Usual practice is to stake at all full and 50 foot (15 meter) stations and at all breaks in topography within the roadway section.

Measurements shall be from the centerline of the survey and shall be noted in the field book. In setting slope stakes the rod is read to the nearest 0.1 feet (3 centimeters) and horizontal distances measured with a metallic tape (if required) at right angles to the survey centerline also recorded to the nearest 0.01 feet (3 millimeters). In heavy work on steep hillsides, special care shall be taken in reading the rod and in setting slope stakes at right angles to the centerline and also in properly measuring the horizontal distances from the survey centerline to the point where rod readings are taken and where slope stakes are set.

The use of hand levels and the Rhodes Arc should generally be limited to determining elevations of inaccessible locations because elevations taken by this method are not as accurate as elevations read with an engineer's level. In rough terrain, parallel profile levels outside of the slope stake lines may be used to check hand level work. It is recommended that electronic instruments are used for this application to increase accuracy.

A slope stake shall be set where the cut slope intersects the existing ground surface (this is known as the "catch point"). The slope stake will be marked on the back side with the appropriate stationing. The inside of the slope stake will bear the letter "C" (indicating that a cut is to be made), the amount of cut to be made at that particular point, the horizontal distance from the centerline to the slope stake, the ratio of slope, and the shoulder distance or hinge point distance.

During the excavation operation, the life of a slope stake is of short duration due to equipment operation. Therefore, a reference to each slope stake in a cut section should be set as follows:

- A guinea shall be driven flush with the ground, outside the slope rounding area, and preferably at an even horizontal distance from the slope stake; a 10 foot (3 meter) offset is usually adequate; if not, additional increments of 10 feet (3 meters) is suggested.
- A guard stake shall be driven behind the guinea. (A guinea is a small stake driven flush with the ground surface.) The back side of the guard stake shall show the station of the section. The front side shall show the cut at the slope stake and the horizontal distance from the slope stake to the reference.

Slope rounding shall be staked to conform to the roadway standards when slope rounding is required.

In most cases, it is not necessary to offset the fill slope stake except where the fill will catch on a traveled roadway. In this event a guinea should be driven flush with the ground at the point where the toe of the fill intersects with the natural ground (catch point). The slope stake shall be placed back of the guinea and out of the traveled way at right angles to the centerline. The marking shall show the stationing of the section on the back of the stake; the front face shall show the letter "F" to indicate fill, with the amount of the fill from the guinea to the grade, shoulder point, the horizontal distance from centerline to the guinea and the ratio of the fill slope to be constructed.

A slope stake marked 0.0 should be driven at the shoulder grade point on entering a cut from a fill or vice-versa.

The standard size slope stake is 1in. X 2 in. X 14 in. (2.54 cm X 5.08 cm X 35.6 cm).

1150-5 Drainage Stakes

Drainage staking shall conform to Subsection 1110 of this Manual, except preparation of a drainage excavation book is optional.

1150-6 Miscellaneous Construction Stakes

Refer to Subsection 1112 of this Manual for miscellaneous construction staking requirements.

1150-7 Grade Stakes (Blue Tops)

Refer to Subsection 1113 of this Manual for grade stake requirements.

1151 GLOBAL POSITION SYSTEM (GPS) AS-BUILT OF PROJECT

During construction of the project, as-built information shall be collected for the purpose of documenting the final installation of the contract bid items. This includes, but is not limited to, all final locations of structures, utilities, manholes, valves, storm drains, catch basins, curb and gutter, pavement, sign structures, light poles, pull boxes, FMS facilities, traffic signals, attenuation devices, barrier runs, and any other appurtenances that are included in the final as-built plan.

The electron data file shall be submitted to the Resident Engineer for the purpose of plotting the information prior to final acceptance. The file shall be compatible with Department CAD and GIS software. GIS file formats and feature codes will be obtained from the Department. The data shall include line and point features, as well as sufficient digital photo links to assure that the GPS information will accurately describe or explain the feature that has been captured. An example is a sign structure that shows up as a point/line feature across the roadway. A digital photo should be linked to the data feature showing the actual sigh placard on the structure. Likewise, a link should be provided to the data containing scanned-in shop drawings or manufacturer cut sheets for specialty features such as parapet fence, and specialty structures.

The as-built locations of project items, including elevations shall be tied to the project datum. It may be necessary to include latitude, longitude of project items.

Precision of locations shall be equal to the precision used to stake the project item.

REFERENCES

Standard Specifications for Road and Bridge Construction, Arizona Department of Transportation, Phoenix, AZ

Engineering Survey Services, *Manual for Field Surveys*, Arizona Department of Transportation, Phoenix, AZ

Basic Surveying, State of Arizona Transportation System, Phoenix, AZ

Highway Plans Reading, Arizona Department of Transportation, Phoenix, AZ

Metrication Guidelines, Arizona Department of Transportation, Phoenix, AZ